IRIS chains

Maintenance-free chains

The most efficient solutions
for your industrial drive system.



SINCE
1935

IRIS O-ring chains

From industrial to agriculture, O-ring chain is the greatest upgrade for a large range of applications. This chains were traditionally used in the Motorcycle chain applications, but customers are now realising the true benefits of the O-Ring chain design in industrial application as they become more competitively priced against the benefits they provide.

O-ring chain can last up to 10 times longer than standard roller chains.

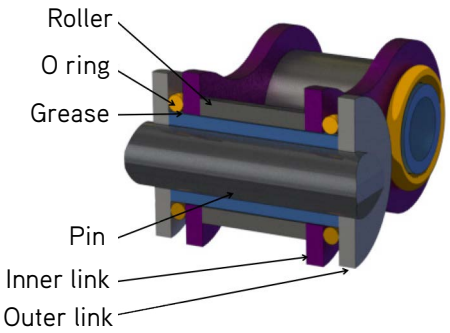

HIGHLIGHTS

- Chain stretches reduced by a pre-stressed and pre-stretched test.
- O-Rings seal the factory-applied lubricant inside the bearing area while keeping the damaging external elements out.
- Operating temperature range: -30ºC to + 100ºC

INDUSTRIES

- Mechanical Engineering
- Agricultural Industry
- Food Industry

O-Ring Roller Chains

ISO SERIES

DIN/ISO No.	Material	Pitch P mm	Roller diameter d1 max mm	Width between Plates b1 min mm	Pin diameter d2 max mm	Pin lenght L max mm	Pin lenght Lc max mm	Inner Plate height h2 max mm	Plate thickness t/T mm	Tensile Strenght Q min KN	Weight per meter q kg/m
06B-1 OR	CS, NP, SS	9,525	6,35	5,72	3,28	14,40	15,60	8,20	1,30	9.00	0,45
08B-1 OR	CS, NP, SS	12,70	8,51	7,75	4,45	18,80	19,90	11,80	1,60	18,00	0,74
10B-1 OR	CS, NP, SS	15,870	10,16	9,65	5,08	22,00	23,30	14,70	1,70	19,00	1,00
12B-1 OR	CS, NP, SS	19,050	12,07	11,68	5,72	24,90	26,80	16,00	1,85	29,00	1,27
16B-1 OR	CS, NP, SS	25,400	15,88	17,02	8,28	39,50	40,90	21,00	4,15/3,1	60,00	2,85
20B-1 OR	CS, NP, SS	31,750	19,05	19,56	10,19	44,50	48,50	26,40	4,5/3,5	95,00	4,04
Reinforced (H) and Super-reinforced (SH)											
8B-1 OR H (428H)	CS, NP, SS	12,700	8,51	7,94	4,45	21,70	22,70	12,30	2,03	8,00	0,90
8B-1 OR SH (428SH)	CS, NP, SS	12,700	8,51	7,94	4,45	21,70	22,70	12,30	2,03	8,00	0,90
10B-1 OR H	CS, NP, SS	15,8750	10,16	9,40	5,08	24,70	26,40	15,10	2,42	22,20	1,39

ASA SERIES

DIN/ISO No.	ANSI No.	Material	Pitch P mm	Roller diameter d1 max mm	Width between Plates b1 min mm	Pin diameter d2 max mm	Pin lenght L max mm	Pin lenght Lc max mm	Inner Plate height h2 max mm	Plate thickness t/T mm	Tensile Strenght Q min KN	Weight per meter q kg/m
06A-1 OR	35 OR	CS, NP, SS	9,252	5,08	4,77	3,58	14,40	15,50	9,00	1,30	7,90	0,39
08A-1 OR	40 OR	CS, NP, SS	12,70	7,95	7,85	3,96	18,30	19,60	12,00	1,50	14,10	0,67
10A-1 OR	50 OR	CS, NP, SS	15,875	10,16	9,4	5,08	23,10	24,80	15,09	2,03	22,20	1,19
12A-1 OR	60 OR	CS, NP, SS	19,05	11,91	12,57	5,94	28,50	30,40	18,00	2,42	31,80	1,62
16A-1 OR	80 OR	CS, NP, SS	25,40	15,88	15,75	7,92	35,60	37,30	24,00	3,25	56,70	2,70
20A-1 OR	100 OR	CS, NP, SS	31,75	19,05	18,95	9,53	43,30	47,00	30,00	4,00	88,50	3,91
Reinforced series												
10A-1 OR H	50-1 OR H	CS, NP, SS	15,875	10,16	9,40	5,08	24,70	26,40	15,09	2,42	22,20	1,18
12A-1 OR H	60-1 OR H	CS, NP, SS	19,05	11,91	12,57	5,94	31,70	34,20	18,00	3,25	31,80	1,97

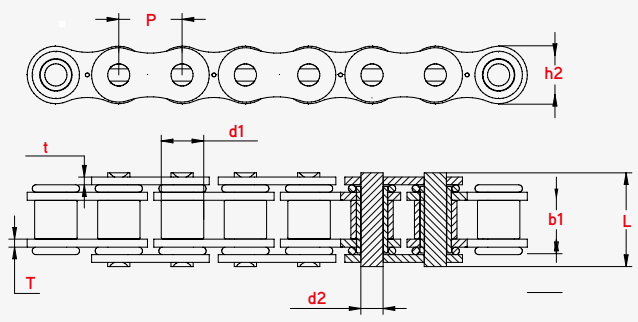

CS CARBON STEEL
NP NICKELLED PLATED
SS STAINLESS STEEL

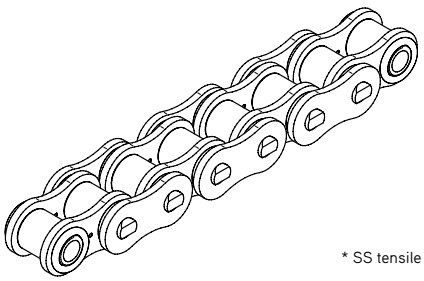

* SS tensile strenght on reuqest

Lube-free chains

Lube-free chains are highly resilient to wear and maintenance-free. These transmission chains provide endurance and a significantly longer service life, and adapt to applications where lubrication passage is difficult, or when machines and materials must remain clean. Efficiency is maximized as shutdowns for regular maintenance are no longer necessary.

These chains are clean and dry, and help the environment by making relubrication redundant.

Chemically nickel-plated chains are optimized for protection from corrosion.

SERVICES

- Many references **available in stock**.
- **Specific product** on request.
- **Matched pairs** on request for chains working in parallel.
- **Chains of any length.**
- **Technical assistance.**

INDUSTRIES

- ✓ Food and packaging
- ✓ Printing and paper manufacture
- ✓ Conveyor systems
- ✓ Textile and clothing
- ✓ Electronics
- ✓ Medical technology

HIGHLIGHTS

- ✓ Longer chain life due to low friction and high resilience.
- ✓ Maximizes efficiency thanks to significant reduction of downtime.
- ✓ Significant cut of maintenance costs.
- ✓ Environmentally-friendly, no relubrication necessary.
- ✓ Reduces scrap and eliminates product contamination.
- ✓ Operating temperature range: -40ºC to + 150ºC.

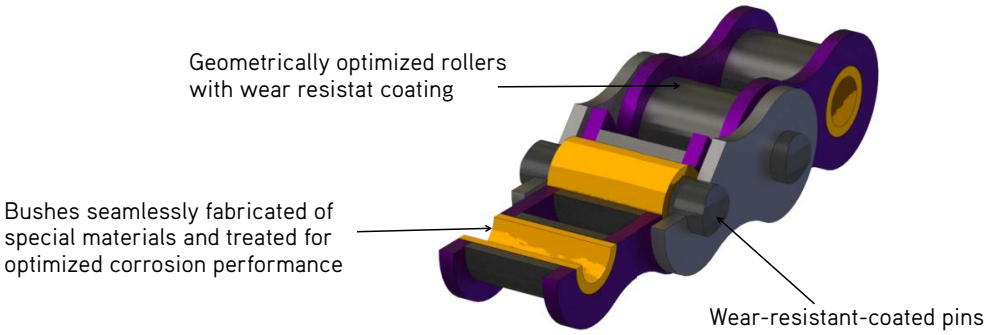





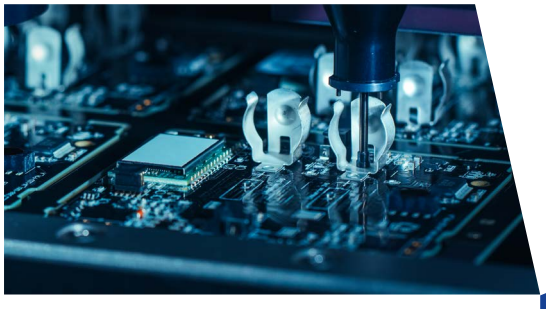

Self-lubricating chains

Self-lubricating roller chains

ISO SERIES

DIN/ISO No.	Material	Pitch P mm	Roller Diameter d1 max mm	Width between Plates b1 min mm	Pin diameter d2 max mm	Pin length L max mm	Pin length Lc max mm	Inner Plate height h2 max mm	Plate thikness T max mm	Transverse Pitch Pt mm	Tensile strength Q min Kn	Weight per meter q kg/m
SIMPLEX												
06B-1	CN, DT, SS	9,525	6,35	5,72	3,31	12,90	14,10	8,20	1,30	-	9,00	0,41
08B-1	CN, DT, SS	12,70	8,51	7,75	4,45	16,70	18,20	11,80	1,60	-	18,00	0,70
10B-1	CN, DT, SS	15,875	10,16	9,65	5,08	19,50	20,90	14,40	1,70	-	22,40	0,95
12B-1	CN, DT, SS	19,05	12,07	11,68	5,72	22,50	24,20	16,20	1,85	-	29,00	1,25
16B-1	CN, DT, SS	25,40	15,88	17,02	8,28	36,10	37,40	21,10	4,15	-	60,00	2,71
20B-1	CN, DT, SS	31,75	19,05	19,56	10,19	41,30	45,00	26,20	4,50	-	95,00	3,72
24B-1	CN, DT, SS	38,100	24,40	25,40	14,63	53,40	57,80	33,20	6,00/4,80	-	160,00	7,08
DUPLEX												
06B-2	CN, DT, SS	9,525	6,35	5,72	3,31	23,40	24,60	8,20	1,30	10,24	16,90	0,78
08B-2	CN, DT, SS	12,70	8,51	7,75	4,45	31,00	32,20	11,80	1,60	13,92	32,00	1,35
10B-2	CN, DT, SS	15,875	10,16	9,65	5,08	36,10	37,50	14,40	1,70	16,59	44,50	1,85
12B-2	CN, DT, SS	19,05	12,07	11,68	5,72	42,00	43,60	16,40	1,85	19,46	57,80	2,50
16B-2	CN, DT, SS	25,40	15,85	17,02	8,28	68,00	69,30	21,10	4,15	31,88	106,00	5,42
20B-2	CN, DT, SS	31,75	19,05	19,56	10,19	77,80	81,50	25,40	4,50	36,45	170,00	7,36
24B-2	CN, DT, SS	38,100	24,40	25,40	14,63	101,70	106,20	33,20	6,00/4,80	48,30	319,20	12,43
TRIPLEX												
08B-3	CN, DT, SS	12,70	8,51	9,65	4,45	45,10	46,10	11,80	1,60	13,92	47,50	2,00
10B-3	CN, DT, SS	15,875	10,16	11,68	5,08	52,70	54,10	14,40	1,70	16,59	66,70	2,80
12B-3	CN, DT, SS	19,05	12,07	17,02	5,72	61,50	63,10	16,40	1,85	19,46	86,70	3,80
16B-3	CN, DT, SS	25,40	15,88		8,28	99,80	101,20	21,10	4,15	31,88	160,00	8,15

ASA SERIES

DIN/ISO No.	ANSI No.	Material	Pitch P mm	Roller Diameter d1 max mm	Width between Plates b1 min mm	Pin diameter d2 max mm	Pin length L max mm	Pin length Lc max mm	Inner Plate height h2 max mm	Plate thikness T max mm	Transverse Pitch Pt mm	Tensile strength Q min Kn	Weight per meter q kg/m
SIMPLEX													
08A-1	40	CN, DT, SS	12,70	7,95	3,96	3,96	16,60	17,80	12,00	1,50	-	14,10	0,62
10A-1	50	CN, DT, SS	15,875	10,16	5,08	5,08	20,70	22,20	15,09	2,03	-	22,00	1,02
12A-1	60	CN, DT, SS	19,05	11,91	5,94	5,94	27,50	29,30	18,00	3,25/2,42	-	34,20	1,65
16A-1	80	CN, DT, SS	25,400	15,88	15,75	7,92	32,70	35,00	24,00	3,25	-	56,70	2,60
20A-1	100	CN, DT, SS	31,750	19,01	18,90	9,53	40,40	44,70	30,00	4,00	-	86,70	3,94
DUPLEX													
08A-2	40-2	CN, DT, SS	12,70	7,95	3,96	3,96	31,00	32,20	12,00	1,50	14,38	28,20	1,12
10A-2	50-2	CN, DT, SS	15,875	10,16	5,08	5,08	38,90	40,40	15,09	2,03	18,11	44,40	2,00
12A-2	60-2	CN, DT, SS	19,05	11,91	5,94	5,94	50,30	52,10	18,00	2,42	22,78	68,40	3,21
16A-2	80-2	CN, DT, SS	25,400	15,88	15,75	7,92	62,70	64,30	24,00	3,25	29,29	113,40	5,15
20A-2	100-2	CN, DT, SS	31,750	19,01	18,90	9,53	76,40	80,50	30,00	4,00	35,76	173,40	7,89

CN CHEMICAL NICKEL
DT DELTA-TONE
SS STAINLESS STEEL

* SS tensile strenght on reuqest

Simplex

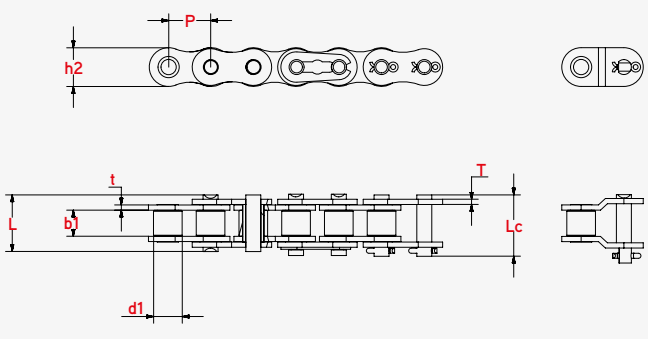

Duplex

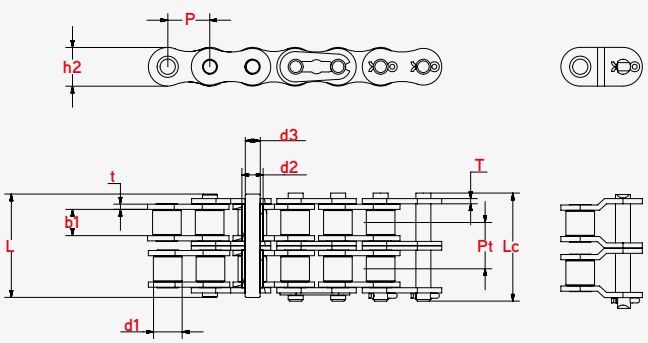

Self-lubricating chains with straight plates

Self-lubricating straight plate chains are a long-service life solution for conveyor systems.

Regular maintenance stops become unnecessary. As a result, these chains are ideal for sectors such as automotive or logistics.

SERVICES

- Many references **available in stock**.
- **Matched pairs** on request for chains working in parallel.
- **Chains of any length.**
- **Technical assistance.**

ISO SERIES

DIN/ISO No.	Material	Pitch P mm	Roller diameter d1 max mm	Width between Plates b1 min mm	Pin diameter d2 max mm	Pin length L max mm	Pin length Lc max mm	Inner Plate height h2 max mm	Plate thikness T max mm	Transverse Pitch Pt mm	Tensile strength Q min Kn	Weight per meter q kg/m
SIMPLEX												
08 B-1	CN, DT, SS	12,700	8,51	7,75	4,45	16,70	18,20	11,80	1,60	-	18,00	0,78
10 B-1	CN, DT, SS	15,875	10,16	9,65	5,08	19,50	20,90	14,70	1,70	-	22,40	1,06
12 B-1	CN, DT, SS	19,050	12,07	11,68	5,72	22,50	24,20	16,00	1,85	-	28,90	1,32
16 B-1	CN, DT, SS	25,400	15,88	17,02	8,28	36,10	39,10	21,0	4,15/3,10	-	60,00	2,92
DUPLEX												
08 B-2	CN, DT, SS	12,700	8,51	7,75	4,45	31,20	32,20	11,80	1,60	13,92	32,00	1,55
10 B-2	CN, DT, SS	15,875	10,16	9,65	5,08	36,10	37,50	14,70	1,70	16,59	44,50	2,08
12 B-2	CN, DT, SS	19,050	12,07	11,68	5,72	42,00	43,60	16,00	1,85	19,46	57,80	2,31
16 B-2	CN, DT, SS	25,400	15,88	17,02	8,28	68,00	71,00	21,0	4,15/3,10	31,88	106,00	5,87

CN CHEMICAL NICKEL
DT DELTA-TONE
SS STAINLESS STEEL

* SS tensile strenght on reuqest

Simplex

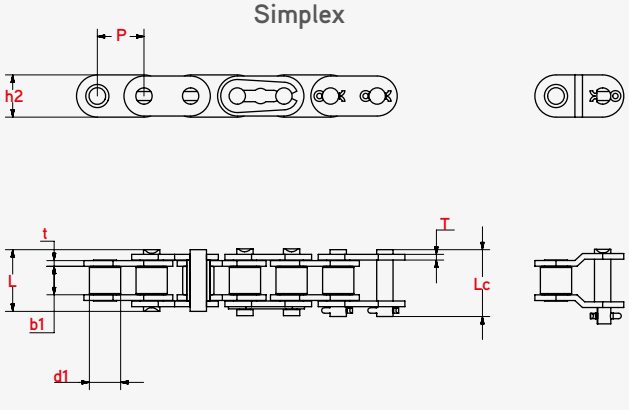

Duplex

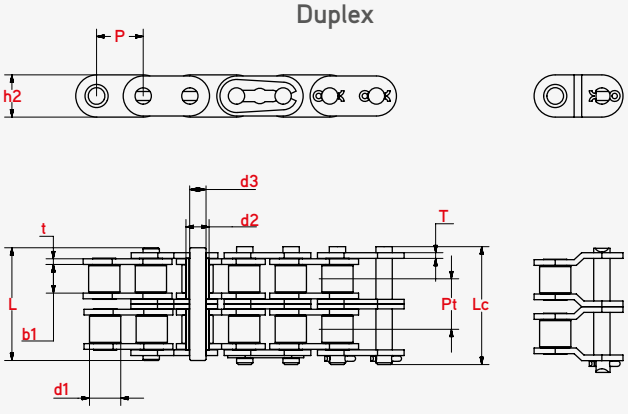

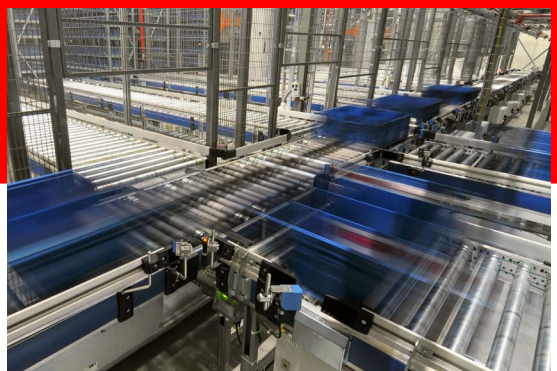

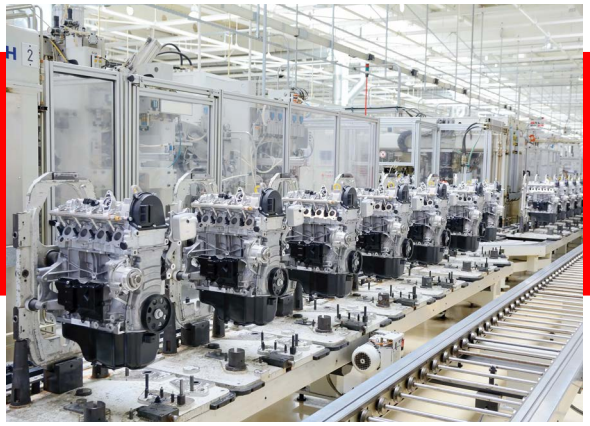

Notes:

IRIS chains

www.iris-chains.com

SINCE 1935

Polígono Ind. Erisono nº 1
20600 Eibar (Guipuzcoa) España

T +34 943 120 550
iris@iris-chains.com