IRIS chains

Conveyor chains

Reliable and durable transportation solutions for demanding industrial applications.



SINCE 1935

Conveyor chains

Iris Chains' conveyor chains are designed to ensure safe, continuous, and efficient product movement across all types of industrial conveyor lines. Thanks to our expertise in chain design and manufacturing, we offer robust, customized solutions tailored to the specific needs of each application.
With a wide range of pitch sizes, attachments, configurations, and materials, our conveyor chains help optimize system performance, reduce downtime, and minimize maintenance costs. The result is more stable transport, fewer incidents, and a longer service life for the chain and its associated components.

SERVICES

- Various products available in stock.
- Corrosion-resistant versions available (Delta Tone, stainless steel).
- Special chains available upon customer request (e.g., rollers with a larger diameter).
- Chain pairings available upon request.
- Chains available in any length.

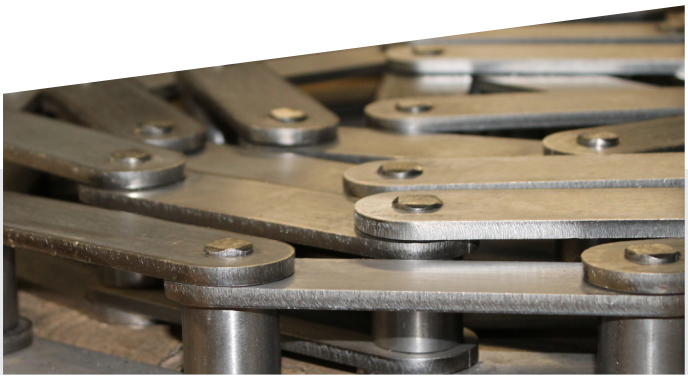



With extensive experience in the production of stainless steel chains, Iris Chains offers high-performance conveyor chains specifically designed for integration into equipment used for environmental protection. Furthermore, thanks to its in-depth knowledge of metallurgy and the properties of various stainless steels, Iris Chains continuously drives the development of new solutions tailored to the sector's growing demands. Operating conditions in environmental treatment facilities are often extremely demanding, characterized by exposure to wastewater, sludge, chemicals, and temperature fluctuations. These conditions require materials with superior performance.

HIGHLIGHTS

- ✓ High corrosion resistance.
- ✓ High resistance to extreme temperatures.
- ✓ Excellent mechanical and tensile strength.
- ✓ Optimal combination of physical and chemical properties.

Below are the main materials used by Iris Chains in the manufacture of chains for the environmental protection industry, along with their most relevant technical characteristics:

✓ Optimal reference

Austenitic stainless steel

	Corrosion Resistance	Temperatures up to
SS 304		450 ºC
SS 309		850 ºC
SS 310S		✓1200 ºC
SS 316L	✓	450 ºC
SS 321		650 ºC

- **Features:** Corrosion resistance, easy to clean, rust-free, weldable, durable in humid environments.
- **Industries:** pharmaceutical, food, chemical, water, furnaces, marine, and fishing.

Martensitic stainless steel

	Tensile Strength
SS 403HT	
SS 410HT	
SS 420HT	✓

- **Features:** Greater hardness, wear resistance, and resistance to surface fatigue.
- **Industries:** wood, steel, glass/ ceramics, mining, recycling, paper, cutting.

Precipitation-hardened stainless steel

	Tensile Strength
SS 630HT (17-4PH)	✓

- **Features:** High mechanical strength, good corrosion and fatigue resistance, dimensional stability, lighter weight and smaller size.
- **Industries:** aerospace, defense, offshore, demanding chemical applications, automation, marine, energy.

Duplex stainless steel (saltwater)

	Corrosion Resistance
SS 2205	✓
SS 2507	✓

- **Features:** High resistance to chlorides, pitting, and stress corrosion cracking.
- **Industries:** offshore, marine, desalination, aquaculture, fishing, ports, chloride-containing chemicals, marine energy.

Other materials used in the environmental industry

Self-lubricating (mainly for bushings)
SS 329
Nitronic 60

- **Features:** Low maintenance, no periodic lubrication required, prevents grease contamination.
- **Industries:** Food, pharmaceuticals, beverages, packaging, logistics, electronics, textiles, dusty environments.

Plastics (mainly for rollers and fins)
Nylon PA6
POM (Delrin)

- **Features:** Reduce noise and weight, prevent product damage, improve chemical resistance, and require less lubrication.
- **Industries:** food, packaging, logistics, pharmaceuticals, airports, electronics, paper/ cardboard, and textiles.

Non-standard chains with metric pitch

Non-standard chains with metric pitch and SOLID PINS

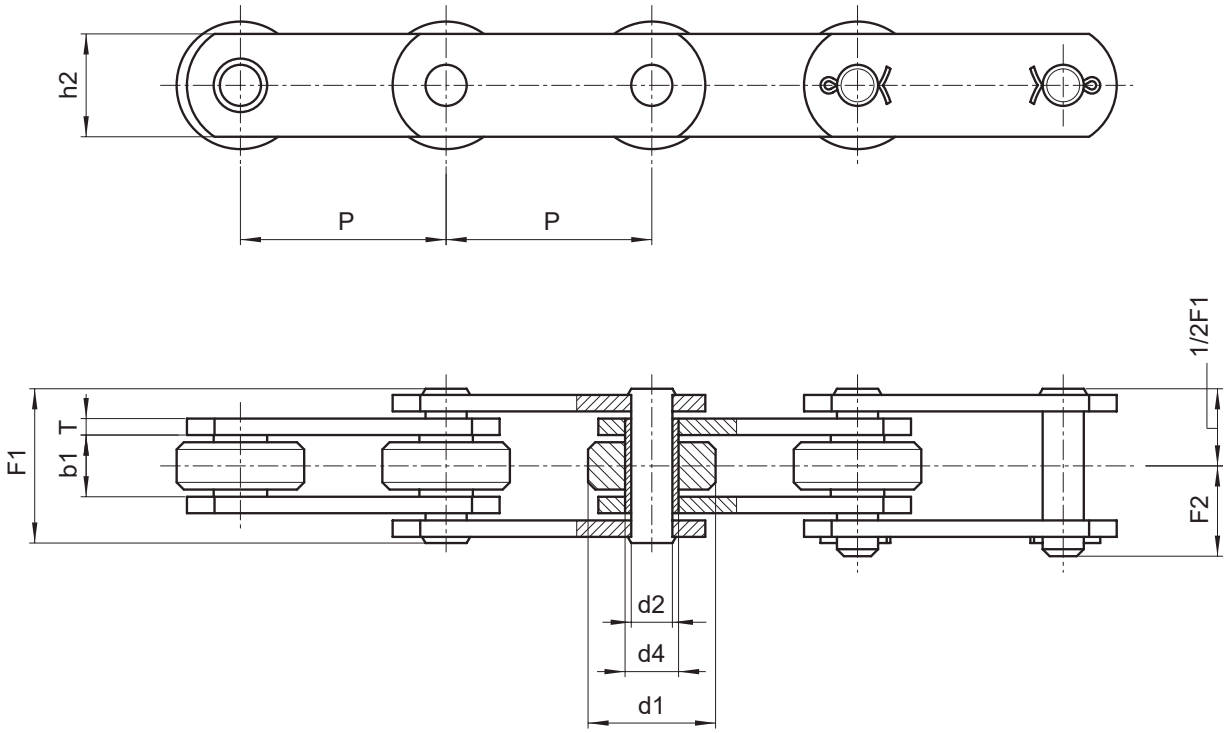

Chain N.	P	b1	d1	d4	d2	h2	T	F1	F2	Breaking load	Weight per meter
	mm	mm	mm	mm	mm	mm	mm	mm	mm	N	Kg/m
90501010103000	50	11,5	25	8,4	5,7	15	2	24	14,6	16.000	1,4
90501010200000	50	11,5	25	8,4	5,7	15	3	28	16,5	18.000	1,7
90691010202000	69	11,5	25	8,4	5,7	15	3	28	16,5	18.000	1,5
90751010203000	75	11,5	25	8,4	5,7	20	3	28	16,5	18.000	1,7
90501010205000	50	11,5	25	8,4	5,7	18	2,5	26	16	18.000	1,7
90501014205000*	50	11,5	25	8,4	5,7	18	2,5	26	16	18.000	1,7
90501010206000	50	11,5	25	11	8	20	3	28	17	30.000	1,9
90501014206000*	50	11,5	25	11	8	20	3	28	17	22.000	1,9
90501010206R00	50	11,5	25	11	8	20	3	28	17	45.000	1,9
90501010400000**	50	15	31	13,2	10	23	3	33	19,5	35.000	3
90501414000001*	50	15	31	13,2	10	23	3	33	19,5	30.000	3
90751010401000	75	15	31	13,2	10	25	3	33	19,5	35.000	2,8
91001010402000	100	15	31	13,2	10	25	3	33	19,5	35.000	2,3

(*) Stainless steel chain
(**) Chain with shaped plates

Different options:

- Rollers made of nylon, delrin, etc.
- Surface treatments of zinc plating, nickel plating, etc.
- With extended pins
- Bushing chain (without roller)
- Pre-tensioned and labelled

Non-standard chains with metric pitch

Non-standard chains with metric pitch and SOLID PINS

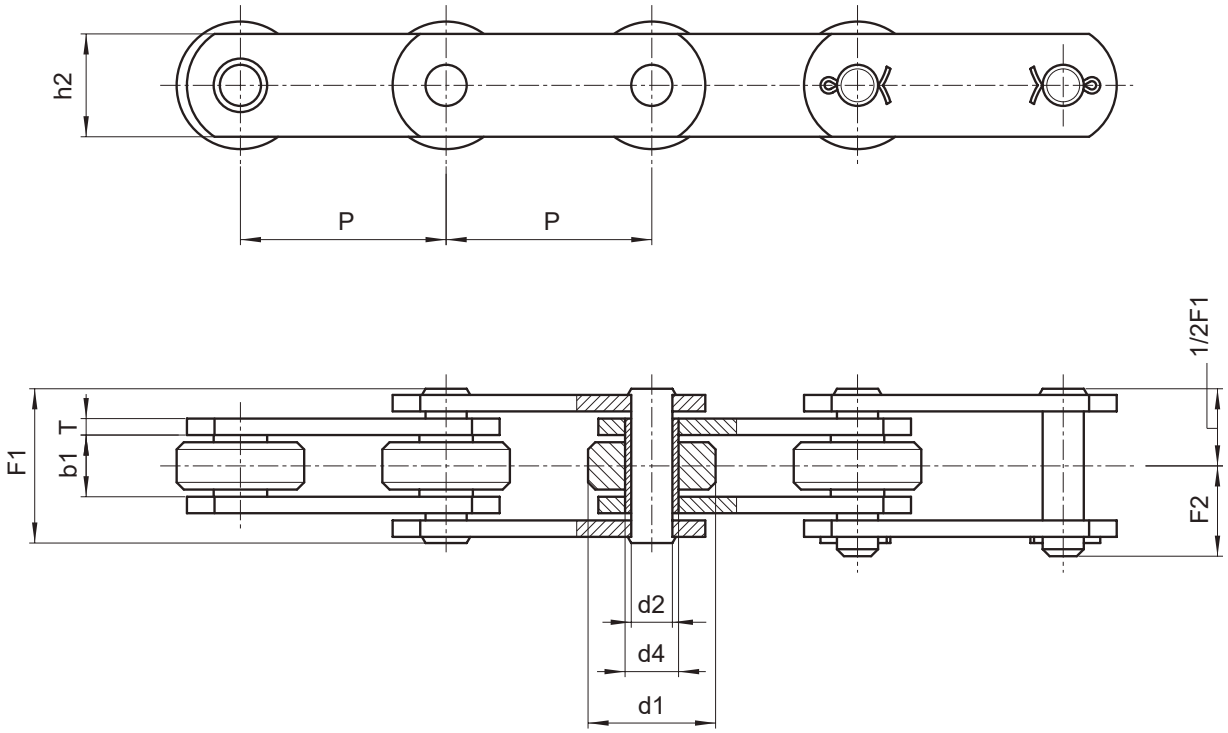

Chain N.	P	b1	d1	d4	d2	h2	T	F1	F2	Breaking load	Weight per meter
	mm	mm	mm	mm	mm	mm	mm	mm	mm	N	Kg/m
90501010500000	50	15	31	13,2	10	25	4	36	21	45.000	3,9
90501010500R00	50	15	31	13,2	10	25	4	36	21	75.000	3,9
90751010501000	75	15	31	13,2	10	25	4	36	21	45.000	3,2
91001010502000	100	15	31	13,2	10	25	4	36	21	45.000	2,7
91251010503000	125	15	31	13,2	10	25	4	36	21	45.000	2,5
91501010504000	150	15	31	13,2	10	25	4	36	21	45.000	2,4
90751010701000	75	22	40	17	12	35	4	43	25	75.000	5,9
91001010703000	100	22	40	17	12	35	4	43	25	75.000	4,9
91001010174300	100	24	40	17	12	35	4	45	26	75.000	6,3
91251010704000	125	22	40	17	12	35	4	43	25	75.000	4,4
91501010704000	150	22	40	17	12	35	4	43	25	75.000	4

Different options:

- Rollers made of nylon, delrin, etc.
- Surface treatments of zinc plating, nickel plating, etc.
- With extended pins
- Bushing chain(without roller)
- Pre-tensioned and labelled

Non-standard chains with metric pitch

Non-standard chains with metric pitch and ATTACHMENTS

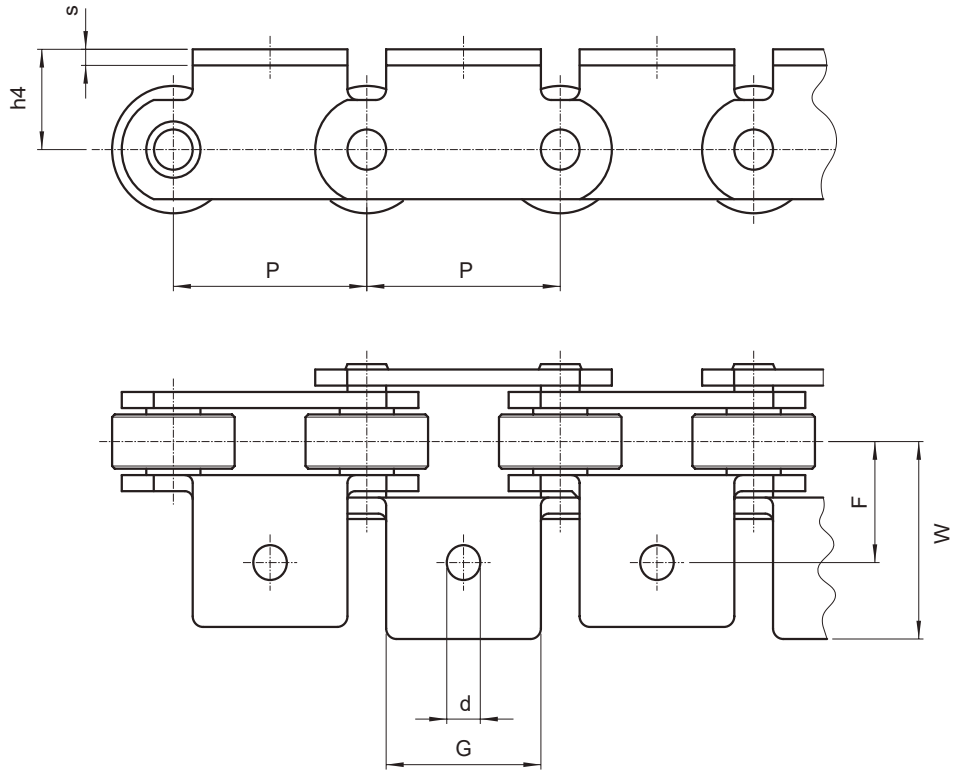

Chain N.	P mm	h4 mm	F mm	G mm	d mm	W mm	s mm	Weight per meter Kg/m	Attachment additional weight Kg
90501010103000	50	25	21	41	6,5	32	2	1,4	0,023
90501010200000	50	25	24	41	6,5	34	3	1,7	0,035
90691010202000	69	27	24	66	6,5	34	3	1,5	0,050
90751010203000**	75	27	33	46	6,5	46	3	1,7	0,055
90501010205000	50	24	22	46	6,5	36	2,5	1,7	0,035
90501014205000*	50	24	22	46	6,5	36	2,5	1,7	0,035
90501010206000	50	24	23	40	6,5	38	3	1,9	0,035
90501014206000*	50	24	23	40	6,5	38	3	1,9	0,035
90501010206R00	50	24	23	40	6,5	38	3	1,9	0,035

(**) Chain suppiled only with attachments A101/A102

Non-standard chains with metric pitch

Non-standard chains with metric pitch and ATTACHMENTS

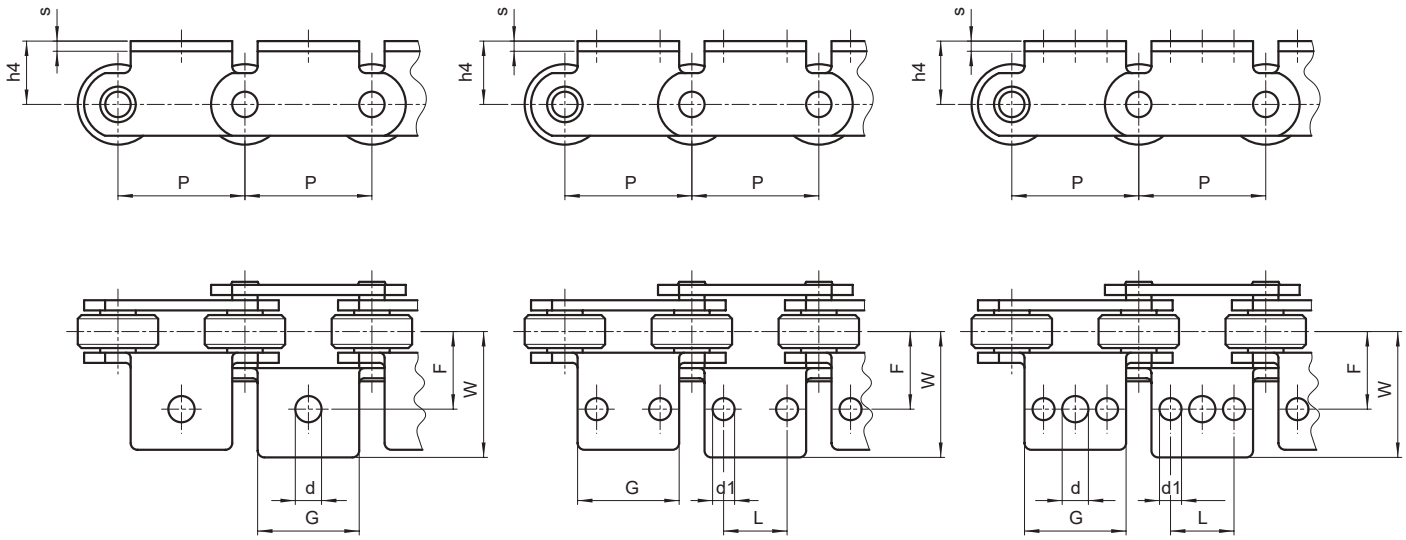

Chain N.	Assembly Configurations	P	h4	F	G	d	d1	W	L	s	Weight per meter	Attachment additional weight
		mm	mm	mm	mm	mm	mm	mm	mm	mm	Kg/m	Kg
90501010400000	all	50	28	31	30	10	/	46	/	3	3	0,035
90501710400B01	all	50	16,5	42	30	10	/	57	/	3	3	0,035
90501710400B02	only on outer links	50	16,5	31	60	10	8,5	48,5	25	3	3	0,050
90501014400000*	all	50	28	31	30	10	/	46	/	3	3	0,035
90751010401000■●	all	75	30	28	60	10	9	41,5	30	3	2,8	0,060
91001010402000♦	all	100	35	31	70	10	9	46,5	35	3	2,3	0,085
90501010500000■●	all	50	35	32	45	10	8,5	48,5	25	4	3,9	0,070

■ Attachments with 1 hole
● Attachments with 2 holes
♦ Attachments with 3 holes
❖ Center hole: b=32.5

Non-standard chains with metric pitch

Non-standard chains with metric pitch and ATTACHMENTS

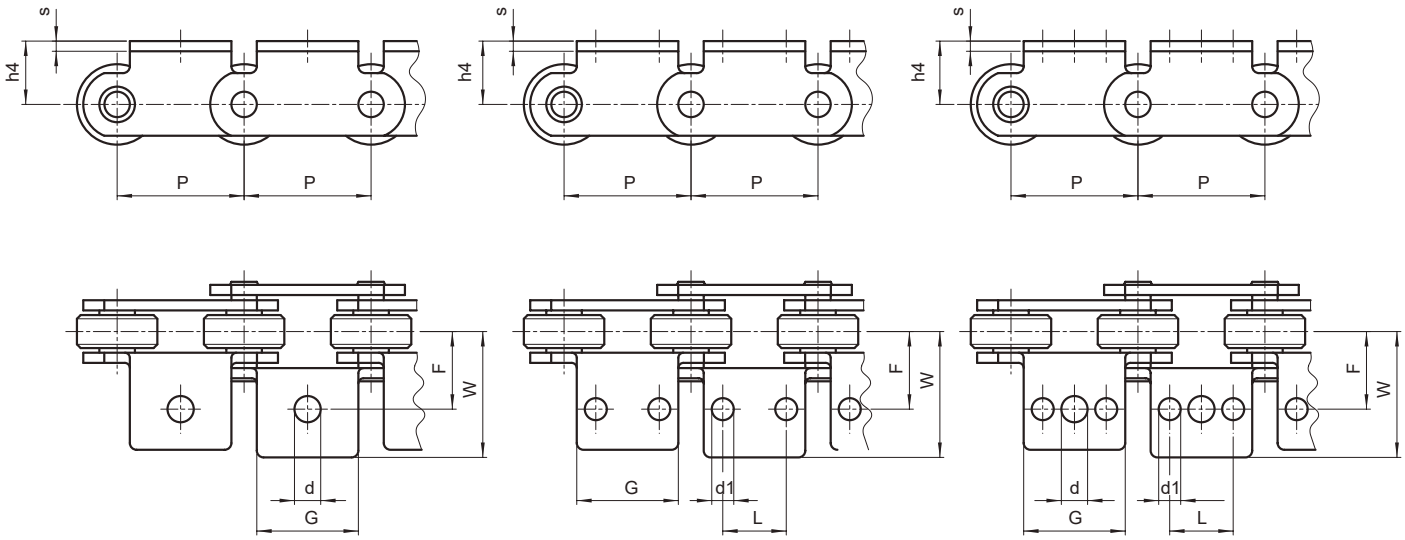

Chain N.	Assembly Configurations	P	h4	F	G	d	d1	W	L	s	Chain weight	Attachment additional weight
		mm	mm	mm	mm	mm	mm	mm	mm	mm	Kg/m	Kg
907510105010000♦	all	75	30	29	60	10	9	44,5	30	4	3,2	0,080
91001010502000♦	all	100	35	32	70	10	9	48,5	35	4	2,7	0,100
912510105030000♦Δ	all	125	35	32	70	10	9	56	35	4	2,5	0,160
915010105040000●Δ	all	150	35	32	70	10	9	56	35	4	2,4	0,250
90751010701000●	all	75	26	38	50	10	9	66,5	25	4	5,9	0,100
91001010703000♦	all	100	40	38	70	10	9	58	35	4	4,9	0,140
91001010703B00♦	all	100	26	38	70	10	9	66,5	35	4	4,9	0,120
91001010174300■	all	100	26	38	70	16,5	/	73	35	4	6,3	0,140
912510107040000♦	all	125	26	40	100	10	9	62,5	70	4	4,4	0,150
915010107040000●	all	150	26	40	100	10	9	56,5	50	4	4	0,180

■ Attachments with 1 hole
● Attachments with 2 holes
♦ Attachments with 3 holes
Δ Welded attachments
❖ Center hole: b=32.5

Non-standard chains with metric pitch

Non-standard chains with metric pitch and HOLLOW PINS

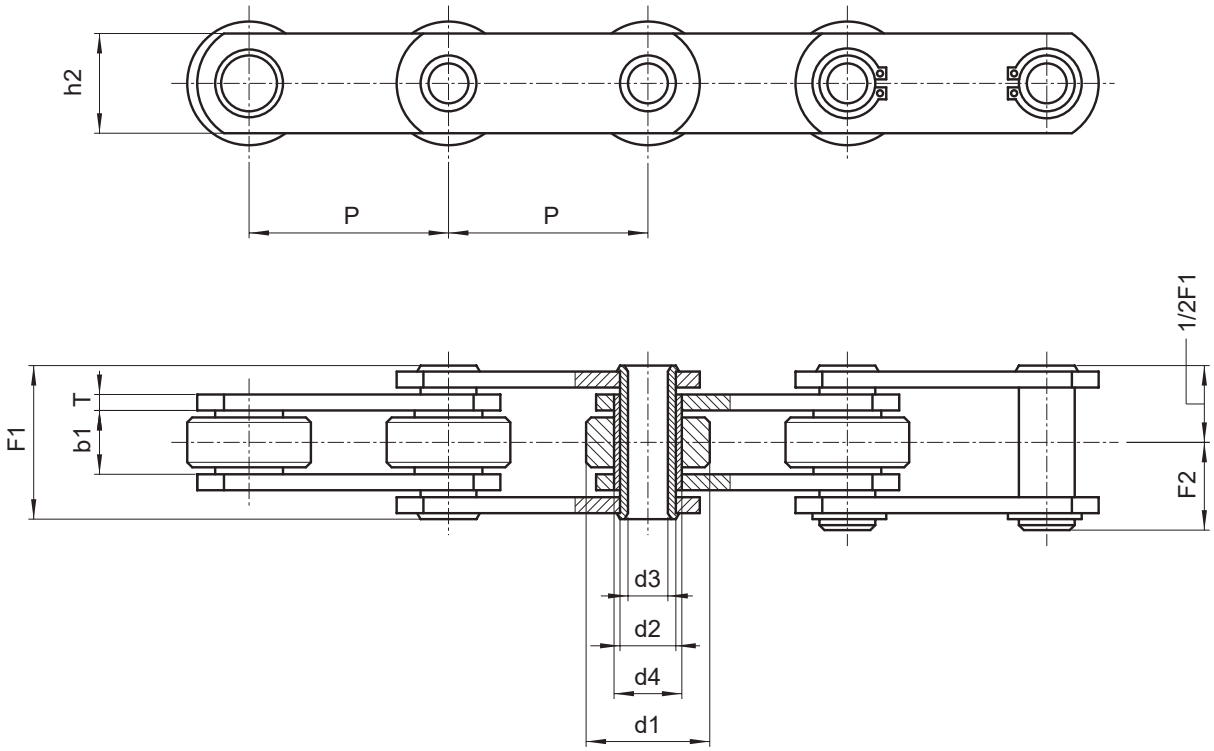

Chain N.	P	b1	d1	d4	d2	d3	h2	T	F1	F2	Breaking load	Weight per meter
	mm	mm	mm	mm	mm	mm	mm	mm	mm	mm	N	Kg/m
90501011025000	50	11,5	25	11	9	6,2	20	2,5	25	14	25.000	1,8
90501011025000*	50	11,5	25	11	9	6,2	20	2,5	25	14	25.000	1,8
90501500P00021**	50	15	31	17	14	10,2	25	3	31	17	35.000	3
90501500P00001	50	15	31	17	14	10,2	25	3	31	17	35.000	3
90501010500C00	50	15	31	17	14	10,2	25	4	35	18,5	40.000	3,6
90501010500CRP***	50	15	31	17	14	10,2	25	4	35	18,5	65.000	3,6
90501014500C00*	50	15	31	17	14	10,2	25	4	35	20	40.000	3,6
90751500501C00	75	15	31	17	14	10,2	25	4	35	18,5	40.000	3,1
90751500501C00*	75	15	31	17	14	10,2	25	4	35	20	40.000	3,1
91001500502C00	100	15	31	17	14	10,2	25	4	35	18,5	40.000	2,6

(*) Stainless steel chain
(**) Chain with shaped plates
(***) Pre-stretched and preselected

Different options:

- Rollers made of nylon, delrin, etc.
- Surface treatments of zinc plating, nickel plating, etc.
- Bush chain (without roller)
- Pre-tensioned and labelled

Non-standard chains with metric pitch

Non-standard chains with metric pitch and HOLLOW PINS

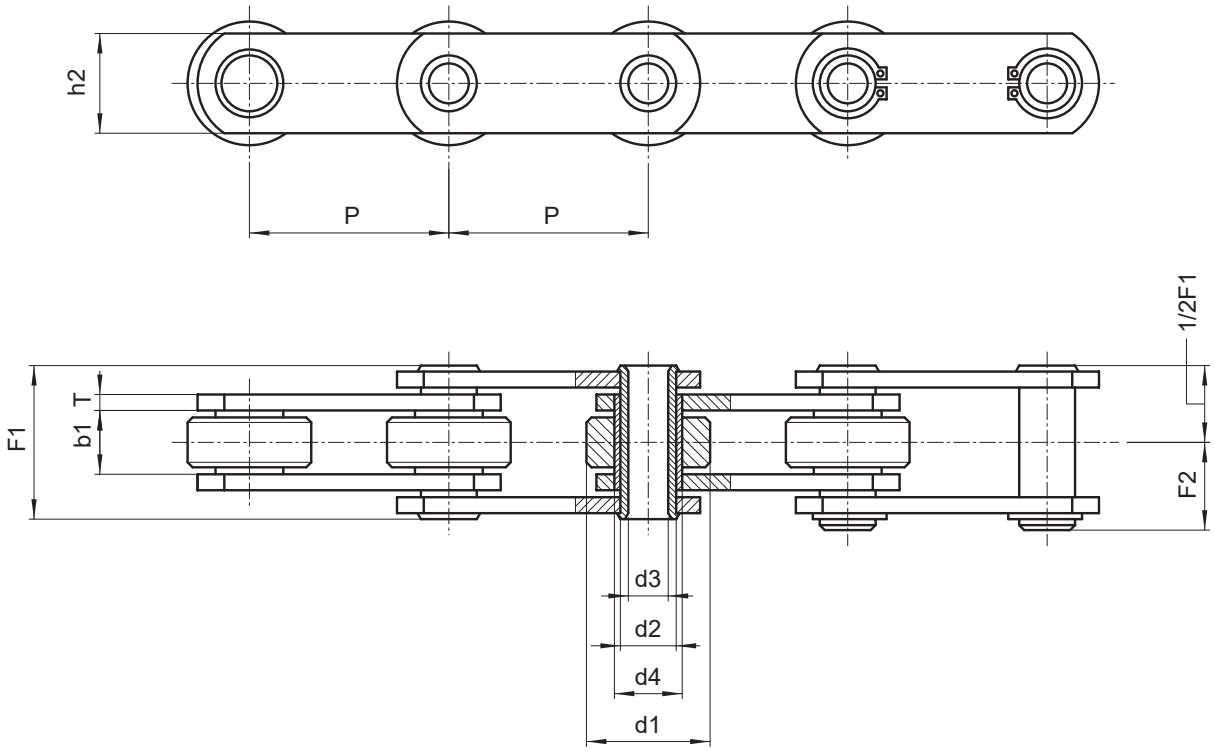

	P	b1	d1	d4	d2	d3	h2	T	F1	F2	Breaking load	Weight per meter
Chain N.	mm	mm	mm	mm	mm	mm	mm	mm	mm	mm	N	Kg/m
91001500502C00*	100	15	31	17	14	10,2	25	4	35	20	40.000	2,6
91251500503C00	125	15	31	17	14	10,2	25	4	35	18,5	40.000	2,4
91251504503C00*	125	15	31	17	14	10,2	25	4	35	20	40.000	2,4
91501500504C00	150	15	31	17	14	10,2	25	4	35	18,5	40.000	2,3
90751500701C00	75	22	40	23	18	12,2	35	4	45	23,5	60.000	4,6
91001500703C00	100	22	40	23	18	12,2	35	4	45	23,5	60.000	4,4
91001500703CR0	100	22	40	23	18	12,2	35	4	45	23,5	75.000	4,4
91251500704C00	125	22	40	23	18	12,2	35	4	45	23,5	60.000	4,2
91251500704CR0	125	22	40	23	18	12,2	35	4	45	23,5	75.000	4,2
91501500705C00	150	22	40	23	18	12,2	35	4	45	23,5	60.000	4
91501500705CR0	150	22	40	23	18	12,2	35	4	45	23,5	75.000	4

(*) Stainless steel chain
(**) Chain with sharped plates

Different options:

- Rollers made of nylon, Delrin, etc.
- Surface treatments of zinc plating, nickel plating, etc.
- Bush chain (without roller)
- Pre-tensioned and labeled

Non-standard chains with metric pitch

Non-standard chains with metric pitch and HIGH PLATES

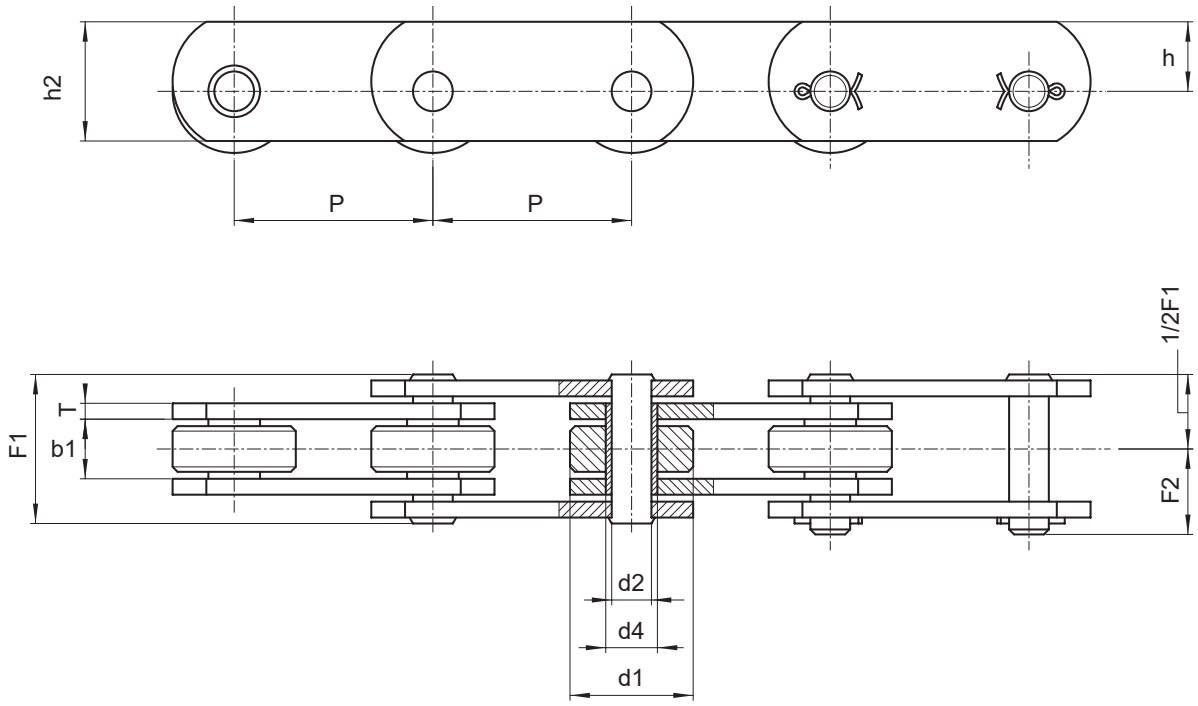

Chain N.	P	b1	d1	d4	d2	h2	h	T	F1	F2	Breaking load	Weight per meter
	mm	mm	mm	mm	mm	mm	mm	mm	mm	mm	N	Kg/m
90501010350Z00**	50	11,5	18	8,4	5,7	17,5	10	2,5	25,5	15,5	18.000	1,25
90501010351000	50	11,5	25	8,4	5,7	25	16,5	2	24	15	16.000	2
90501010352000	50	15	31	13,2	10	30	17,5	4	36	21	45.000	4,5
90501014352000*	50	15	31	13,2	10	30	17,5	4	36	21	45.000	4,5
90751010353000	75	15	31	13,2	10	30	17,5	4	36	21	45.000	3,8
90751010353000*	75	15	31	13,2	10	30	17,5	4	36	21	45.000	3,8
91001010353000	100	15	31	13,2	10	30	17,5	4	36	21	45.000	3,5
91001014353000*	100	15	31	13,2	10	30	17,5	4	36	21	45.000	3,5

Differents options:

- Rollers made of nylon, delrin, etc.
- Surface treatments of zinc plating, nickel plating, etc.
- Pre-tensioned and labelled

(*) Stainless steel chain
(**) Zinc plated chain

Non-standard chains with metric pitch

Non-standard chains with metric pitch and HOLLOW PINS

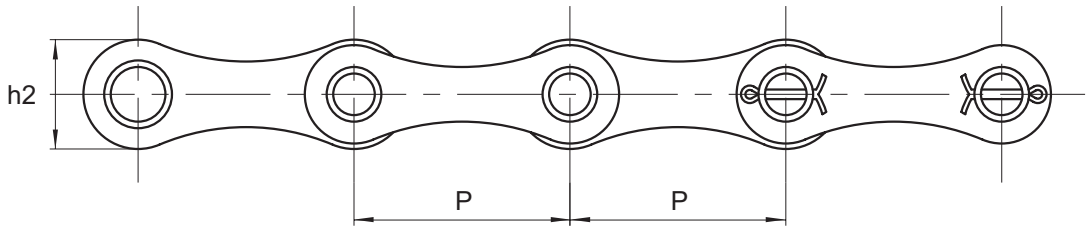

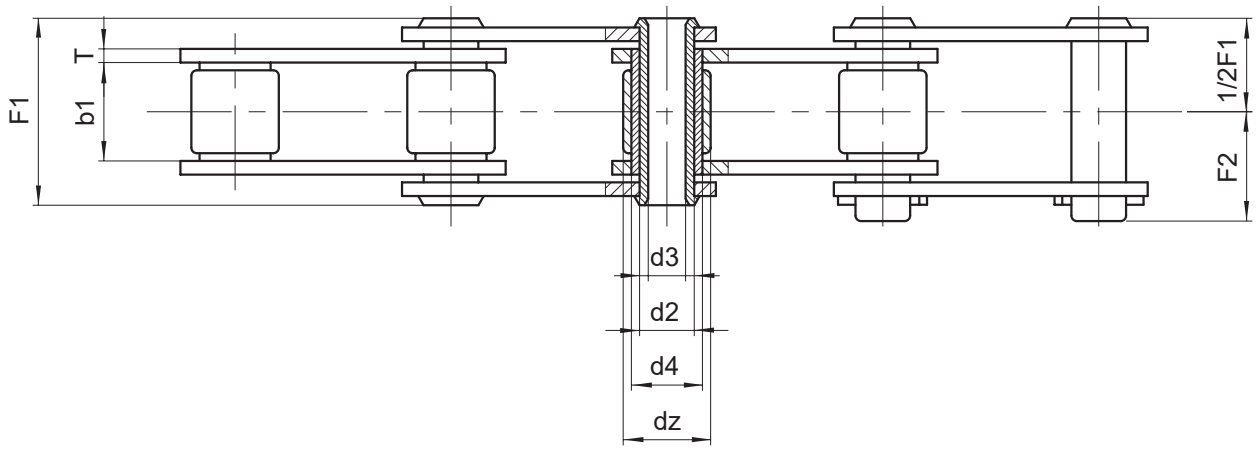

Chain N.	P	b1	dz	d4	d2	d3	h2	T	F1	F2	Breaking load	Weight per meter
	mm	mm	mm	mm	mm	mm	mm	mm	mm	mm	N	Kg/m
90411500000900	41,75	20,5	17	13,8	11	8,3	22	3	36	22,7	27.000	1,5
90411504000900*	41,75	20,5	17	13,8	11	8,3	22	3	36	22,7	13.500	1,5
90411500RZ0000**	41,75	20,5	17	13,8	11	8,3	25	3	36	22,7	35.000	1,9
90411500RBZ000**	41,75	20,5	17	13,8	11	8,3	25	3	36	22,7	50.000	1,9

(*) Stainless steel chain
(**) Zinc plated chain

Different options:

- Rollers made of nylon, delrin, etc.
- Surface treatments of zinc plating, nickel plating, etc.
- Pre-tensioned and labelled

Non-standard chains with metric pitch

Non-standard chains with metric pitch and HOLLOW PINS

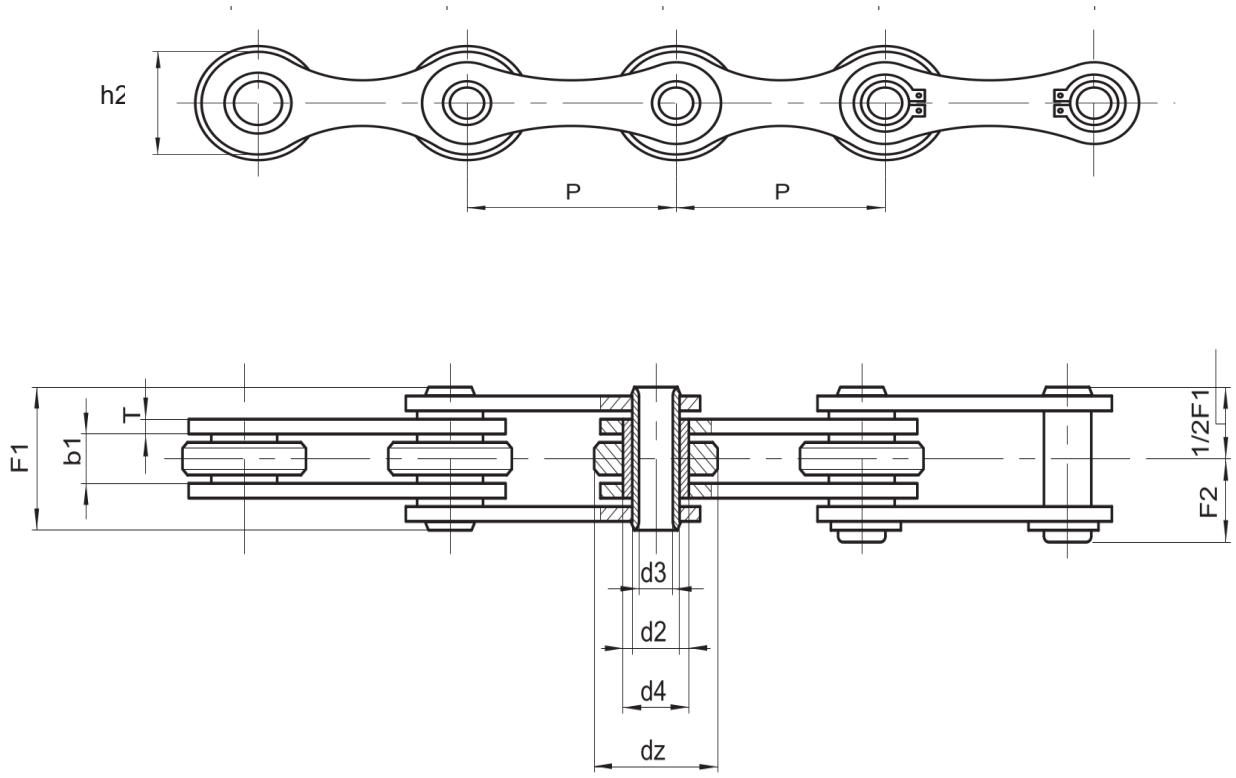

Cadena N.	P	b1	dz	d4	d2	d3	h2	T	F1	F2	Breaking load	Weight per meter
	mm	mm	mm	mm	mm	mm	mm	mm	mm	mm	N	Kg/m
90501102610900	50	10	30	16	11,5	8,2	25,5	3	26,5	14,5	60.000	2,2
90511100600900	50,8	10	30	16	11,5	8,2	25,5	3	26,5	14,5	60.000	2,1
90511104600900*	50,8	10	30	16	11,5	8,2	25,5	3	26,5	14,5	32.000	2,1
90601500P00002	60	10	30	16	11,5	8,2	26	3	26,5	14,5	60.000	1,5
90631103604900	63	10	30	16	11,5	8,2	26	3	26,5	14,5	60.000	2,3
91001102630900	100	10	30	16	11,5	8,2	25,5	3	26,5	14,5	60.000	1,5

(*) Stainless steel chain
(**) Zinc plated chain

Different options:

- Rollers made of nylon, delrin, etc.
- Surface treatments of zinc plating, nickel plating, etc.
- Pre-tensioned and labelled

Non-standard chains with metric pitch

Non-standard chains with metric pitch and ATTACHMENTS

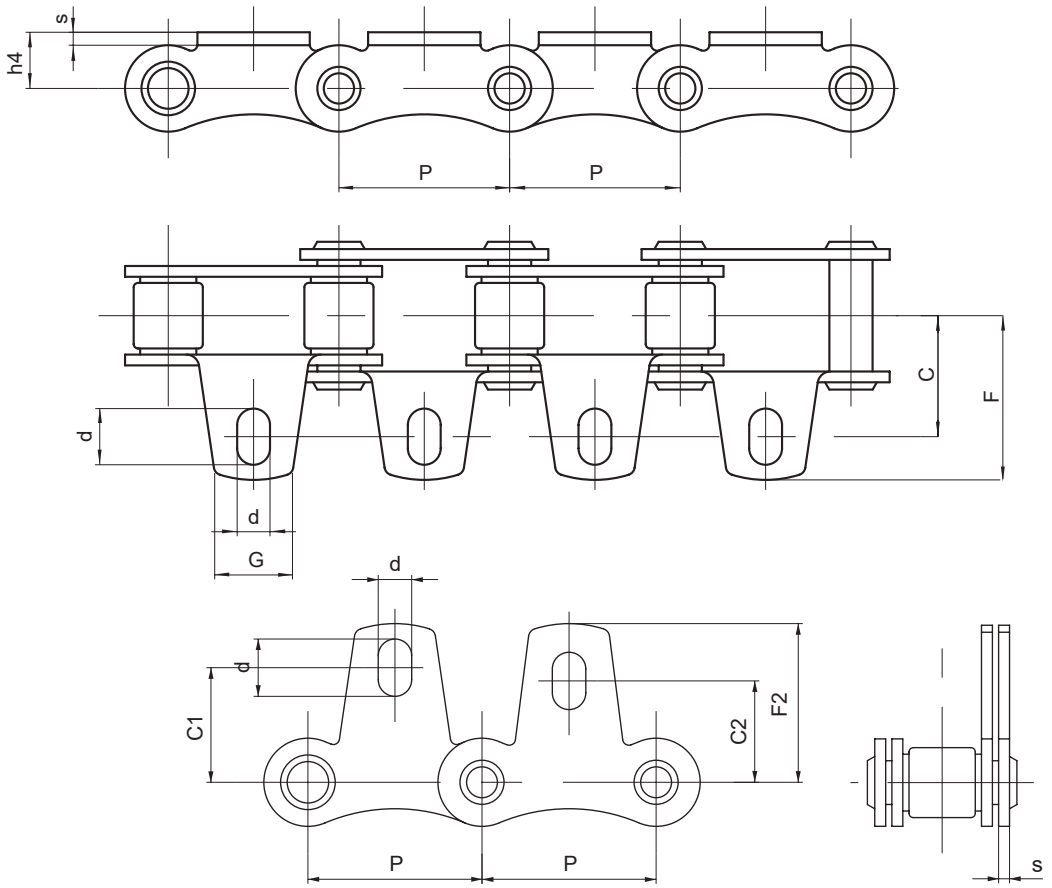

	P	h4	c	C1	C2	G	d	F	F2	s	Weight per meter	Attachment additional weight
Chain N.	mm	mm	mm	mm	mm	mm	mm	mm	mm	mm	Kg/m	Kg
90501010206000	50	13,5	30	29	25	19	14-8,3	43,5	39,5	3	1,5	0,020
90411504000900	50,8	13,5	30	29	25	19	14-8,3	43,5	39,5	3	1,5	0,020

M Series Conveyor Chains

Series M

ISO 1977 DIN 8167 Series Conveyor Chains (M Series) with SOLID PINS

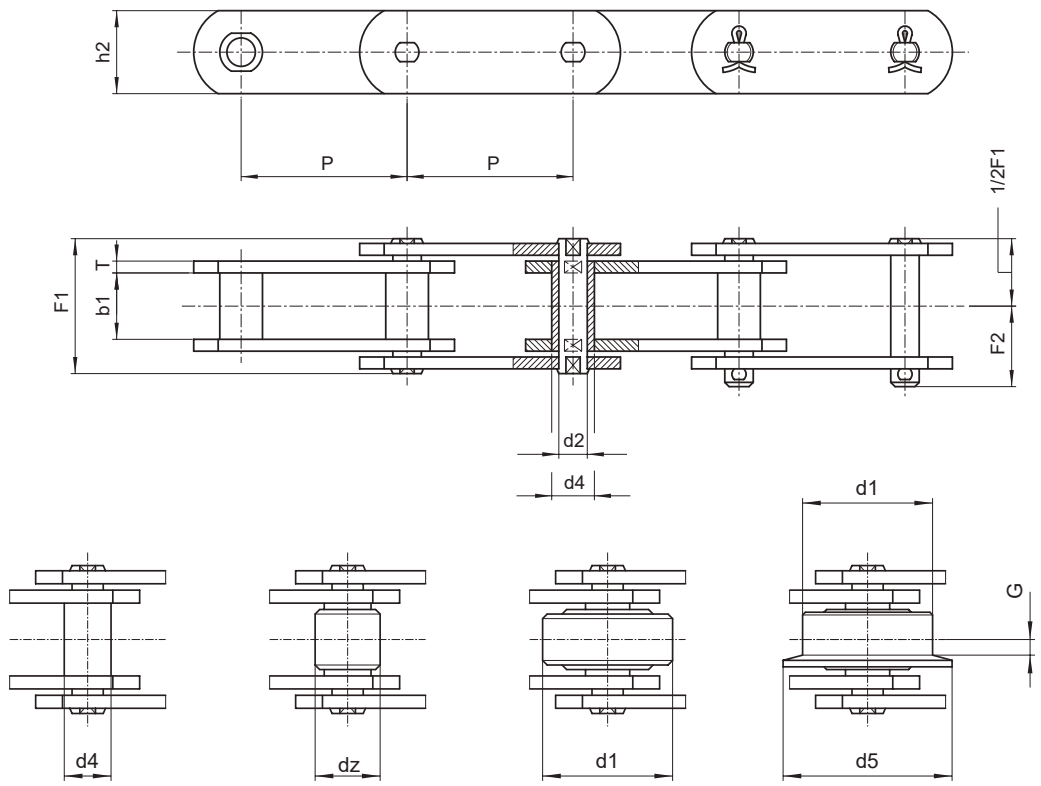

Type A | Type B | Type C | Type D

	P	b1	dz	d1	d5	G	d4	d2	h2	T	F1	F2	Breaking load		Weight per meter Kg/m			
Chain N.	mm	mm	mm	mm	mm	mm	mm	mm	mm	mm	mm	mm	N	N*	type A	type B	type C	type D
M 20	40	16	12,5	25	32	3,5	9	6	18	2,5	33	19	20.000	32.000	1,1	1,3	2,4	2,5
	50	"	"	"	"	"	"	"	"	"	"	"	"	"	1,01	1,3	2	2,1
	63	"	"	"	"	"	"	"	"	"	"	"	"	"	0,99	1,2	1,8	1,9
	80	"	"	"	"	"	"	"	"	"	"	"	"	"	0,9	1,1	1,6	1,6
M 28	50	18	15	30	36	4	10	7	20	3	36	20,5	28.000	42.000	1,6	1,9	3,3	3,4
	63	"	"	"	"	"	"	"	"	"	"	"	"	"	1,5	1,7	2,8	2,9
	80	"	"	"	"	"	"	"	"	"	"	"	"	"	1,4	1,6	2,5	2,6
	100	"	"	"	"	"	"	"	"	"	"	"	"	"	1,3	1,5	2,1	2,2
M 40	63	20	18	36	45	4,5	11	8	25	4	40,5	24	40.000	60.000	2,25	2,6	4,4	4,6
	80	"	"	"	"	"	"	"	"	"	"	"	"	"	2	2,3	3,7	3,9
	100	"	"	"	"	"	"	"	"	"	"	"	"	"	1,9	2,1	3,2	3,4
	125	"	"	"	"	"	"	"	"	"	"	"	"	"	1,8	2	2,9	3

(*) Breaking load with heat treated plates

Different options:

- Rollers made of nylon, delrin, etc.
- With extended pins
- In STAINLESS steel
- Surface treatments of zinc plating, nickel plating, etc.

M Series Conveyor Chains

Series M

ISO 1977 DIN 8167 Series Conveyor Chains (M Series) with SOLID PINS

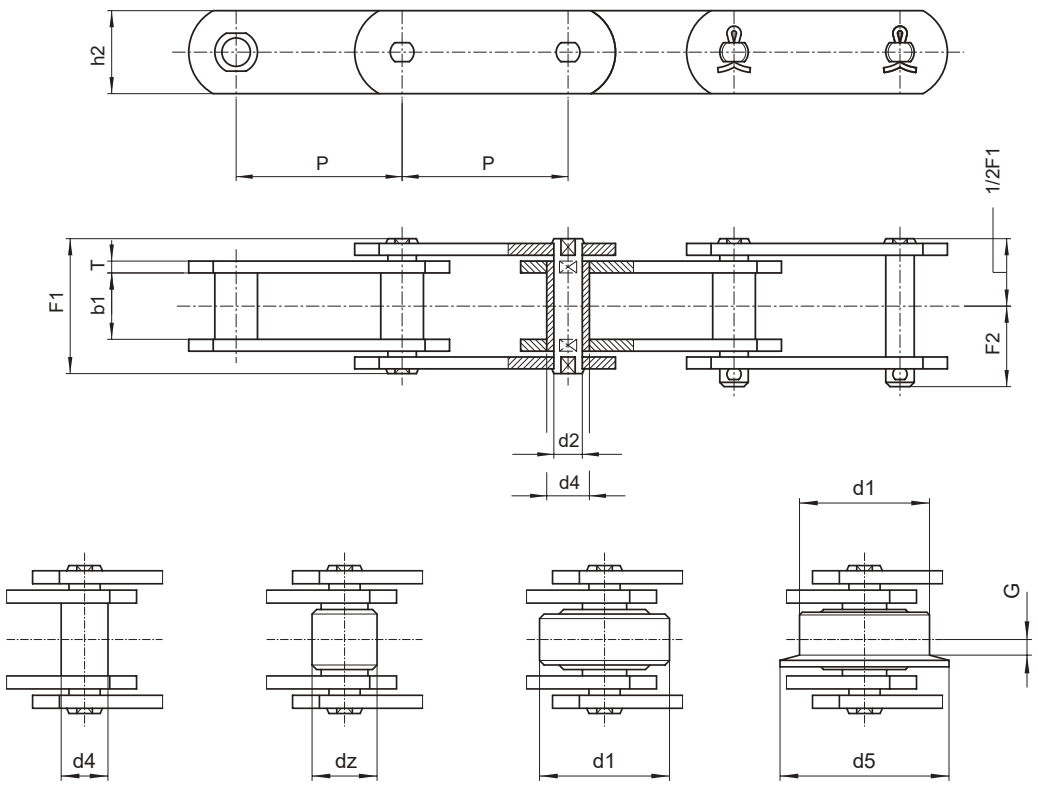

Type A Type B Type C Type D

	P	b1	dz	d1	d5	G	d4	d2	h2	T	F1	F2	Breaking load		Weight per meter Kg/m			
Chain N.	mm	mm	mm	mm	mm	mm	mm	mm	mm	mm	mm	mm	N	N*	type A	type B	type C	type D
M 56	63	24	21	42	50	7	15	10	30	4	45	26	56.000	85.000	3,4	3,9	6,8	7,2
	80	"	"	"	"	"	"	"	"	"	"	"	"	"	3	3,4	5,7	6
	100	"	"	"	"	"	"	"	"	"	"	"	"	"	2,8	3,1	5	5,2
	125	"	"	"	"	"	"	"	"	"	"	"	"	"	2,6	2,9	4,4	4,5
	160	"	"	"	"	"	"	"	"	"	"	"	"	"	2,54	2,7	3,9	4,1
M 80	80	28	25	50	60	7	18	12	35	5	54,5	30,5	80.000	125.000	4,7	5,4	9,2	9,4
	100	"	"	"	"	"	"	"	"	"	"	"	"	"	4,3	4,8	7,9	8
	125	"	"	"	"	"	"	"	"	"	"	"	"	"	4	4,4	6,9	7
	160	"	"	"	"	"	"	"	"	"	"	"	"	"	3,7	4	6	6,1
	200	"	"	"	"	"	"	"	"	"	"	"	"	"	3,5	3,8	5,3	5,4
M 112	80	32	30	60	75	7,5	21	15	40	6	63	36	112.000	175.000	6,8	8	14	14,7
	100	"	"	"	"	"	"	"	"	"	"	"	"	"	6,2	7,2	12	12,5
	125	"	"	"	"	"	"	"	"	"	"	"	"	"	5,7	6,5	10,4	10,8
	160	"	"	"	"	"	"	"	"	"	"	"	"	"	5,3	5,9	9	9,3
	200	"	"	"	"	"	"	"	"	"	"	"	"	"	5	5,5	7,9	8,2

(*) Breaking load with heat treated plates

Different options:

- Rollers made of nylon, delrin, etc.
- With extended pins
- In STAINLESS steel
- Surface treatments of zinc plating, nickel plating, etc.

M Series Conveyor Chains

Series M

ISO 1977 DIN 8167 Series Conveyor Chains (M Series) with SOLID PINS

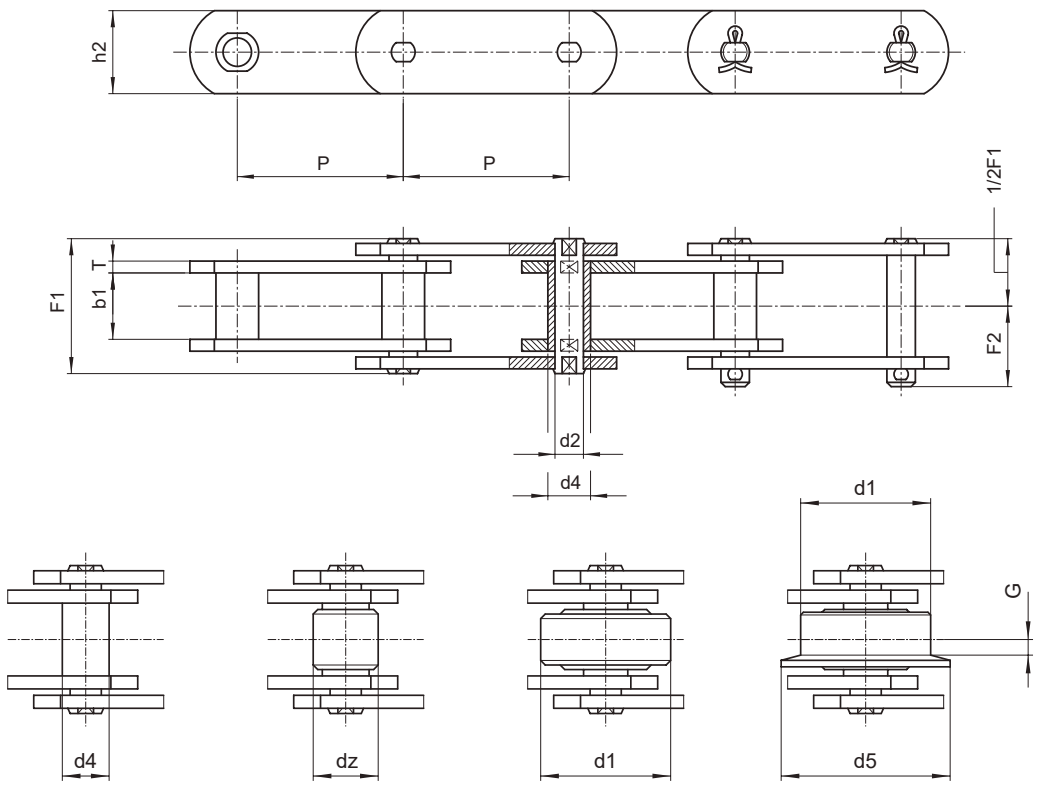

Type A Type B Type C Type D

	P	b1	dz	d1	d5	G	d4	d2	h2	T	F1	F2	Breaking load		Weight per meter Kg/m			
Chain N.	mm	mm	mm	mm	mm	mm	mm	mm	mm	mm	mm	mm	N	N*	type A	type B	type C	type D
M 160	100	37	36	70	90	8,5	25	18	50	7	72	41,5	160.000	260.000	9,7	11,2	18,9	20,2
	125	"	"	"	"	"	"	"	"	"	"	"	"	"	8,9	10	16,3	18,1
	160	"	"	"	"	"	"	"	"	"	"	"	"	"	8,2	9,1	14	15,4
	200	"	"	"	"	"	"	"	"	"	"	"	"	"	7,6	8,4	12,2	13,4
	250	"	"	"	"	"	"	"	"	"	"	"	"	"	7,3	7,9	11	12
M 224	125	43	42	85	105	10	30	21	60	8	84	47	224.000	340.000	13	14,8	25,8	26,6
	160	"	"	"	"	"	"	"	"	"	"	"	"	"	12	13,4	22	22,7
	200	"	"	"	"	"	"	"	"	"	"	"	"	"	11	12,1	19	19,5
	250	"	"	"	"	"	"	"	"	"	"	"	"	"	10,3	11,2	16,7	17,1
	315	"	"	"	"	"	"	"	"	"	"	"	"	"	9,8	10,5	14,9	15,2
M 315	160	48	50	100	124	10,5	36	25	70	10	97	55	315.000	520.000	18,3	20,4	33,3	34,6
	200	"	"	"	"	"	"	"	"	"	"	"	"	"	16,7	18,4	28,7	29,7
	250	"	"	"	"	"	"	"	"	"	"	"	"	"	15,6	17	25,2	26
	315	"	"	"	"	"	"	"	"	"	"	"	"	"	14,6	15,7	22,3	22,9
	400	"	"	"	"	"	"	"	"	"	"	"	"	"	13,9	14,8	20	20,5

(*) Breaking load with heat treated plates

Different options:

- Rollers made of nylon, Delrin, etc.
- With extended pins
- In STAINLESS steel
- Surface treatments of zinc plating, nickel plating, etc.

M Series Conveyor Chains

Series M

ISO 1977 DIN 8167 Series Conveyor Chains (M Series) with SOLID PINS

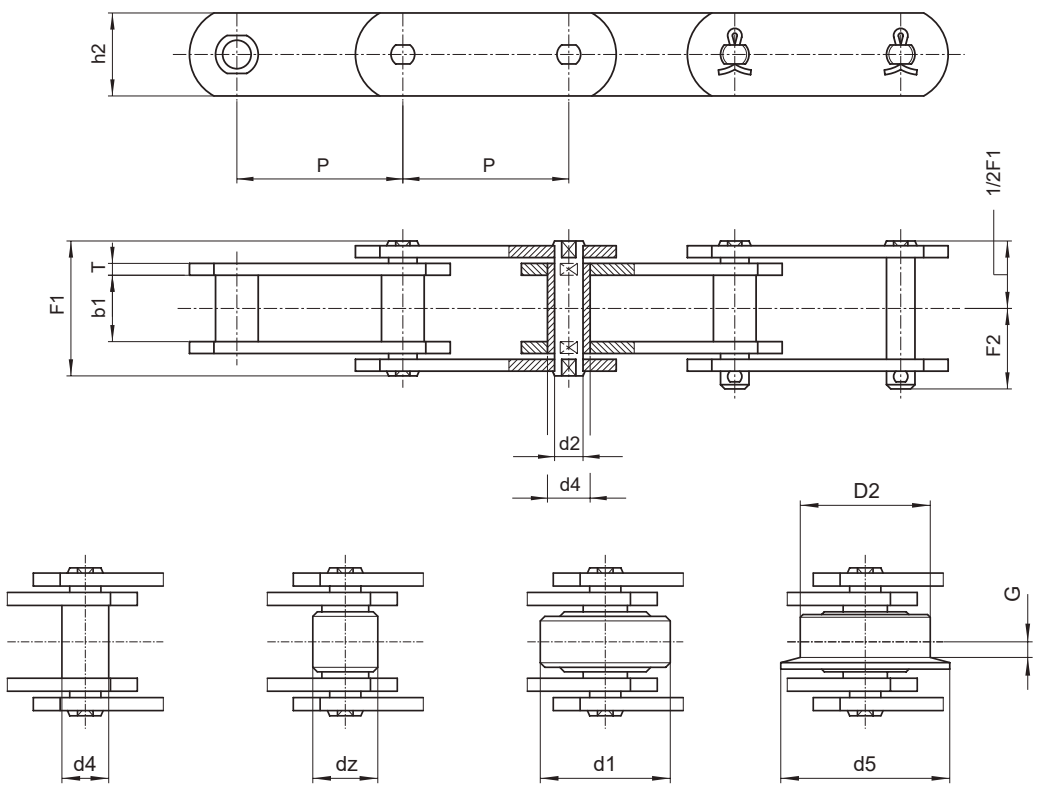

Type A Type B Type C Type D

Chain N.	P mm	b1 mm	dz mm	d1 mm	d5 mm	G mm	d4 mm	d2 mm	h2 mm	T mm	F1 mm	F2 mm	Breaking load N	Breaking load N*	Weight per meter Kg/m type A	type B	type C	type D
M 450	200	56	60	120	149	11,5	42	30	80	12	114	67	450.000	700.000	24	27	40,5	47
	250	"	"	"	"	"	"	"	"	"	"	"	"	"	22	24,9	39,5	41
	315	"	"	"	"	"	"	"	"	"	"	"	"	"	21	23	34,5	36
	400	"	"	"	"	"	"	"	"	"	"	"	"	"	19,6	21,2	20,5	31,4
M 630	250	67	70	140	170	15	50	36	100	14	137	87,5	630.000	900.000	36	40,8	64	66,9
	315	"	"	"	"	"	"	"	"	"	"	"	"	"	33,4	36,6	55,5	57,7
	400	"	"	"	"	"	"	"	"	"	"	"	"	"	31,5	33,9	49	50,7
	500	"	"	"	"	"	"	"	"	"	"	"	"	"	29,6	31,6	43,6	45
M 900	250	78	85	170	210	17	60	44	120	16	153	95	900.000	1.250.000	49,7	56.5	98,3	104,5
	315	"	"	"	"	"	"	"	"	"	"	"	"	"	45,5	51,8	84,2	89,7
	400	"	"	"	"	"	"	"	"	"	"	"	"	"	42	46,2	72,5	76,9
	500	"	"	"	"	"	"	"	"	"	"	"	"	"	39,3	42,7	63,8	67,6
	600	"	"	"	"	"	"	"	"	"	"	"	"	"	37,3	39,9	56,6	58,9

(*) Breaking load with heat treated plates

Different options:

- Rollers made of nylon, Delrin, etc.
- With extended pins
- In STAINLESS steel
- Surface treatments of zinc plating, nickel plating, etc.

M Series Conveyor Chains

Series M

ISO 1977 DIN 8167 (M Series) Conveyor Chains with ATTACHMENTS

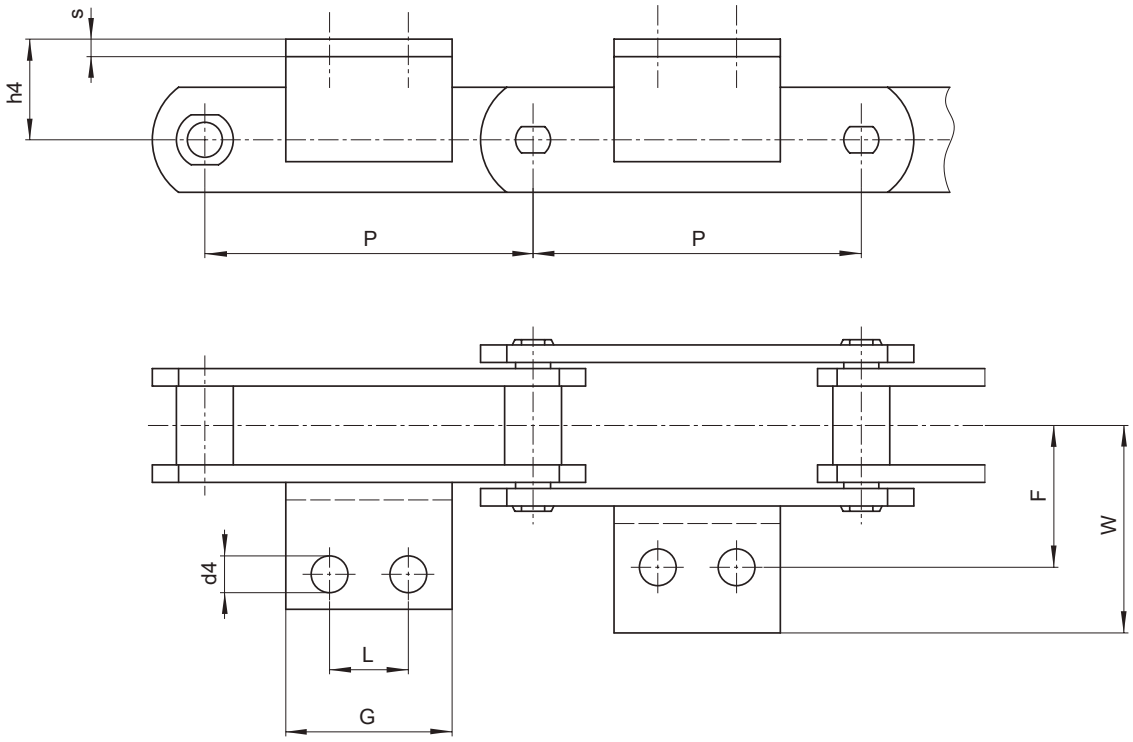

	P	h4	F	G	d4	W	L	Angle	Weight per meter Kg/m				Attachment additional weight
Chain N.	mm	mm	mm	mm	mm	mm	mm	mm	type A	type B	type C	type D	kg
M 20	40	16	27	14	6,6	40	■	●	1,1	1,3	2,4	2,5	0,020
	50	"	"	14	"	"	■	●	1,01	1,3	2	2,1	0,020
	63	"	"	35	"	"	20	25x3	0,99	1,2	1,8	1,9	0,040
	80	"	"	50	"	"	35	25x3	0,9	1,1	1,6	1,6	0,060
M 28	50	20	32	20	9	47	■	20x3	1,6	1,9	3,3	3,4	0,020
	63	"	"	20	"	"	■	30x3	1,5	1,7	2,8	2,9	0,020
	80	"	"	45	"	"	25	"	1,4	1,6	2,5	2,6	0,050
	100	"	"	60	"	"	40	"	1,3	1,5	2,1	2,2	0,080
M 40	63	25	35	31	9	50	■	● 30x4	2,25	2,6	4,4	4,6	0,040
	80	"	"	45	"	"	25	● "	2	2,3	3,7	3,9	0,070
	100	"	"	60	"	"	40	● "	1,9	2,1	3,2	3,4	0,100
	125	"	"	85	"	"	65	"	1,8	2	2,9	3	0,150

All attachments can have only one hole.

■ Attachments with 1 hole.
● Alternatively, the plate and attachments are formed as a single, folded piece.

M Series Conveyor Chains

Series M

ISO 1977 DIN 8167 (M Series) Conveyor Chains with ATTACHMENTS

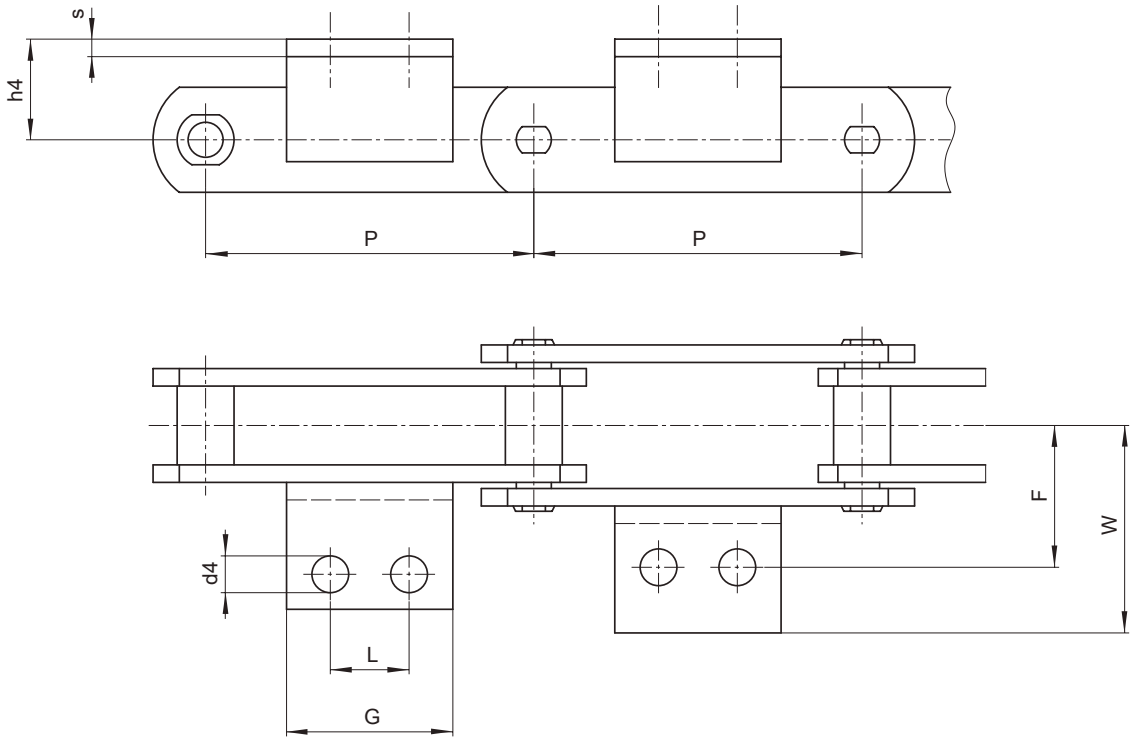

	P	h4	F	G	d4	W	L	Angle	Weight per meter Kg/m				Attachment additional weight
Chain N.	mm	mm	mm	mm	mm	mm	mm	mm	type A	type B	type C	type D	kg
M 56	63	30	44	22	11	61	■	40x4	3,4	3,9	6,8	7,2	0,050
	80	"	"	30	"	"	■	"	3	3,4	5,7	6	0,070
	100	"	"	50	"	"	25	"	2,8	3,1	5	5,2	0,120
	125	"	"	75	"	"	50	"	2,6	2,9	4,4	4,5	0,180
	160	"	"	110	"	"	85	"	2,54	2,7	3,9	4,1	0,270
M 80	80	35	48	30	11	65	■	● 40x4	4,7	5,4	9,2	9,4	0,070
	100	"	"	50	"	"	25	● "	4,3	4,8	7,9	8	0,120
	125	"	"	75	"	"	50	● "	4	4,4	6,9	7	0,180
	160	"	"	110	"	"	85	● "	3,7	4	6	6,1	0,270
	200	"	"	150	"	"	125	● "	3,5	3,8	5,3	5,4	0,360
M 112	80	40	55	28	14	80	■	50x6	6,8	8	14	14,7	0,130
	100	"	"	40	"	"	■	"	6,2	7,2	12	12,5	0,180
	125	"	"	65	"	"	35	"	5,7	6,5	10,4	10,8	0,300
	160	"	"	95	"	"	65	"	5,3	5,9	9	9,3	0,440
	200	"	"	130	"	"	100	"	5	5,5	7,9	8,2	0,590

All attachments can have only one hole.

■ Attachments with 1 hole.
● Alternatively, the plate and attachment are formed as a single, folded piece.

M Series Conveyor Chains

Series M

ISO 1977 DIN 8167 (M Series) Conveyor Chains with ATTACHMENTS

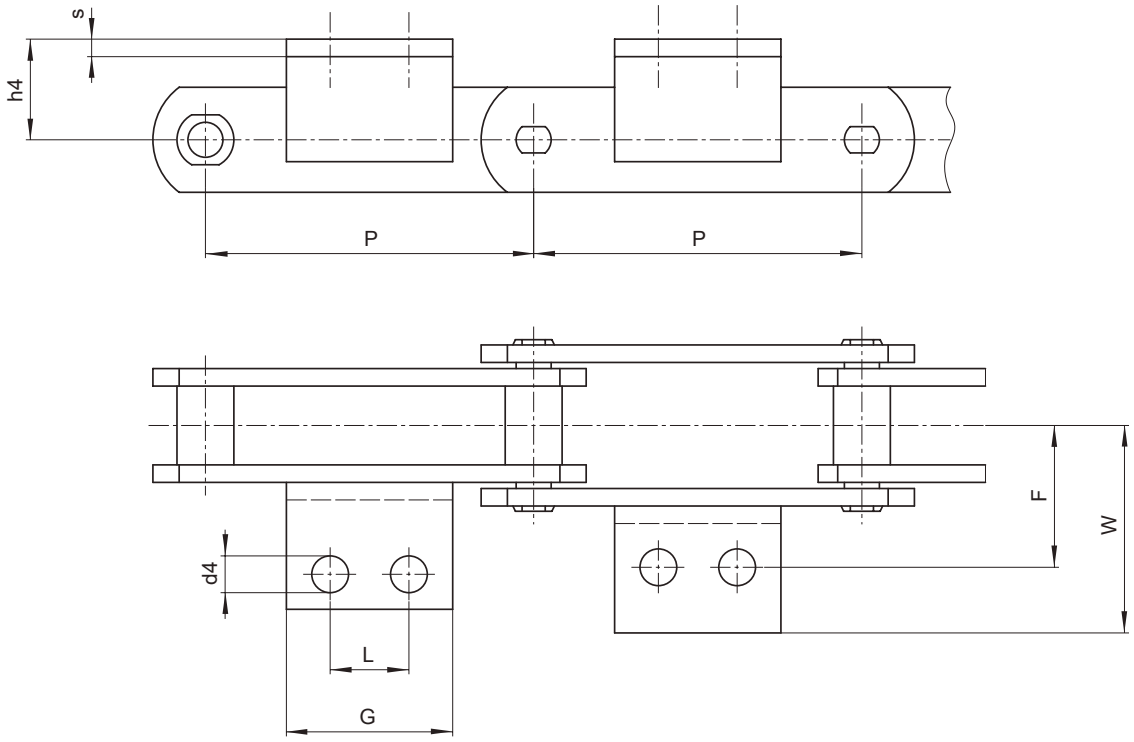

	P	h4	F	G	d4	W	L	Angle	Weight per meter Kg/m				Attachment additional weight
Chain N.	mm	mm	mm	mm	mm	mm	mm	mm	type A	type B	type C	type D	kg
M 160	100	45	62	30	14	85	■	50x6	9,7	11,2	18,9	20,2	0,130
	125	"	"	50	"	"	25	"	8,9	10	16,3	18,1	0,230
	160	"	"	80	"	"	50	"	8,2	9,1	14	15,4	0,370
	200	"	"	115	"	"	85	"	7,6	8,4	12,2	13,4	0,530
	250	"	"	175	"	"	145	"	7,3	7,9	11	12	0,800
M 224	125	55	70	35	18	100	■	60x8	13	14,8	25,8	26,6	0,300
	160	"	"	60	"	"	■	"	12	13,4	22	22,7	0,430
	200	"	"	100	"	"	65	"	11	12,1	19	19,5	0,710
	250	"	"	160	"	"	125	"	10,3	11,2	16,7	17,1	1,130
	315	"	"	230	"	"	190	"	9,8	10,5	14,9	15,2	1,600
M 315	160	65	80	35	18	115	■	70x9	18,3	20,4	33,3	34,6	0,320
	200	"	"	85	"	"	50	"	16,7	18,4	28,7	29,7	0,660
	250	"	"	140	"	"	100	"	15,6	17	25,2	26	1,100
	315	"	"	190	"	"	155	"	14,6	15,7	22,3	22,9	1,460
	400	"	"	205	"	"	155	"	13,9	14,8	20	20,5	1,460

All attachments can have only one hole.

■ Attachments with 1 hole.

M Series Conveyor Chains

Series M

ISO 1977 DIN 8167 (M Series) Conveyor Chains with ATTACHMENTS

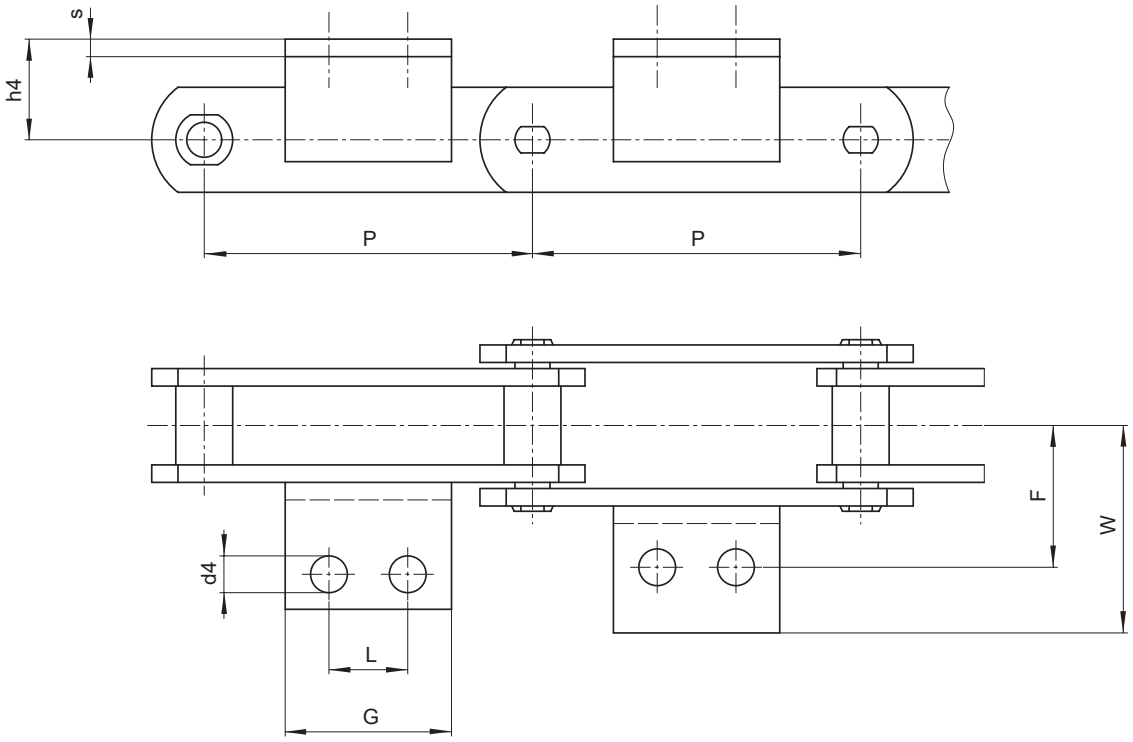

	P	h4	F	G	d4	W	L	Angle	Weight per meter Kg/m				Attachment additional weight
Chain N.	mm	mm	mm	mm	mm	mm	mm	mm	type A	type B	type C	type D	kg
M 450	200	75	90	50	18	125	■	70x9	24	27	40,5	47	0,330
	250	"	"	125	"	"	85	"	22	24,9	39,5	41	1,000
	315	"	"	195	"	"	155	"	21	23	34,5	36	1,600
	400	"	"	280	"	"	240	"	19,6	21,2	30,5	31,4	2,300
M 630	250	90	115	50	24	165	■	100x12	36	40,8	64	66,9	0,900
	315	"	"	150	"	"	100	"	33,4	36,6	55,5	57,7	2,700
	400	"	"	240	"	"	190	"	31,5	33,9	49	50,7	4,300
	500	"	"	350	"	"	300	"	29,6	31,6	43,6	45	6,200
M 900	250	110	140	60	30	195	■	120x15	49,7	56,5	98,3	104,5	1,600
	315	"	"	125	"	"	65	"	45,5	51,8	84,2	89,7	3,300
	400	"	"	215	"	"	155	"	42	46,2	72,5	76,9	5,700
	500	"	"	300	"	"	240	"	39,3	42,7	63,8	67,6	8,000
	600	"	"	350	"	"	300	"	37,3	39,9	56,6	58,9	8,000

All attachments can have only one hole.

■ Attachments with 1 hole.

M Series Conveyor Chains

Series M

ISO 1977 DIN 8167 Series Conveyor Chains (M Series) with HOLLOW PINS

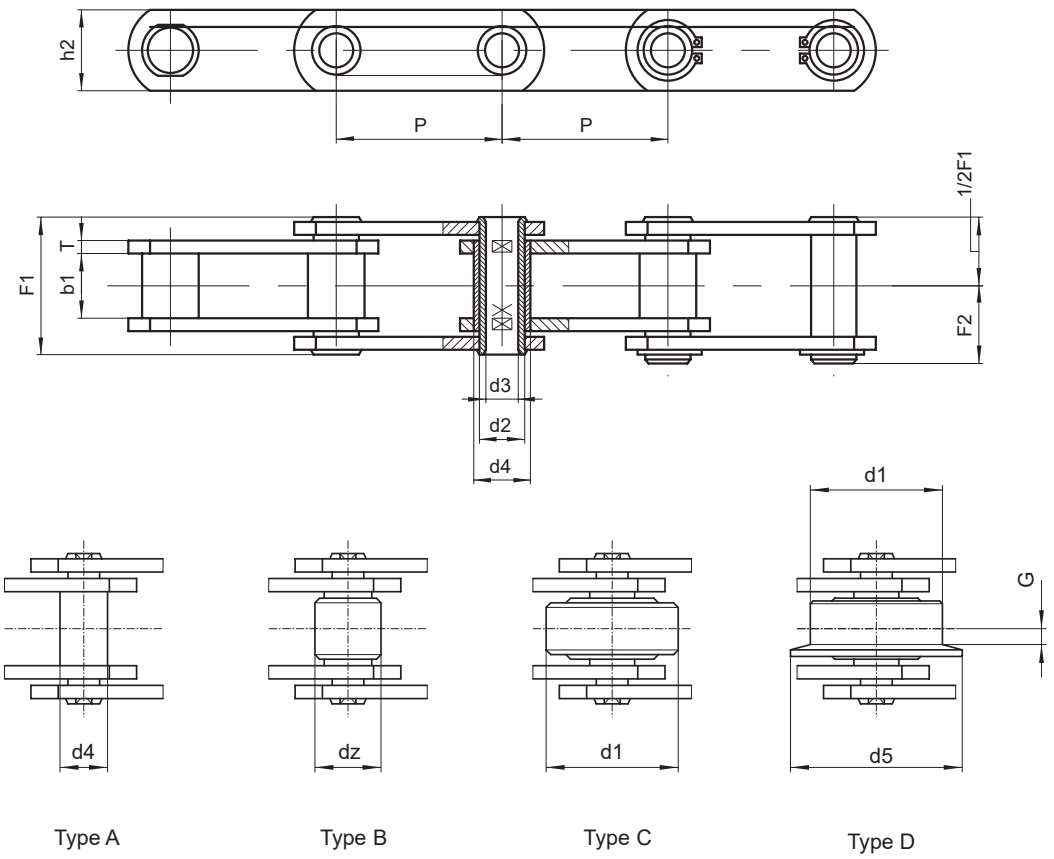

Type A | Type B | Type C | Type D

Chain N.	P	b1	dz	d1	d5	G	d4	d2	d3	h2	T	F1	F2	Breaking load		Weight per meter
	mm	mm	mm	mm	mm	mm	mm	mm	mm	mm	mm	mm	mm	N	N*	Kg/m**
MC 28	50	20	25	36	45	4,5	17	13	8,2	25	3	36	20,5	28.000	40.000	4,3
	63	"	"	"	"	"	"	"	"	"	"	"	"	"	"	3,8
	80	"	"	"	"	"	"	"	"	"	"	"	"	"	"	3,2
	100	"	"	"	"	"	"	"	"	"	"	"	"	"	"	2,8
	125	"	"	"	"	"	"	"	"	"	"	"	"	"	"	2,5
MC 56	63	24	30	50	60	7	21	15,5	10,2	35	4	45	25	56.000	90.000	8,5
	80	"	"	"	"	"	"	"	"	"	"	"	"	"	"	7,2
	100	"	"	"	"	"	"	"	"	"	"	"	"	"	"	6,2
	125	"	"	"	"	"	"	"	"	"	"	"	"	"	"	5,4
	160	"	"	"	"	"	"	"	"	"	"	"	"	"	"	4,7

(*) Breaking load with heat treated plates
(**) Weight for chain with roller "Type C" roller

Different options:

- Rollers made of nylon, delrin, etc.
- Pre-tensioned and labelled
- In STAINLESS steel
- Surface treatments of zinc plating, nickel plating, etc.

M Series Conveyor Chains

Series M

ISO 1977 DIN 8167 Series Conveyor Chains (M Series) with HOLLOW PINS

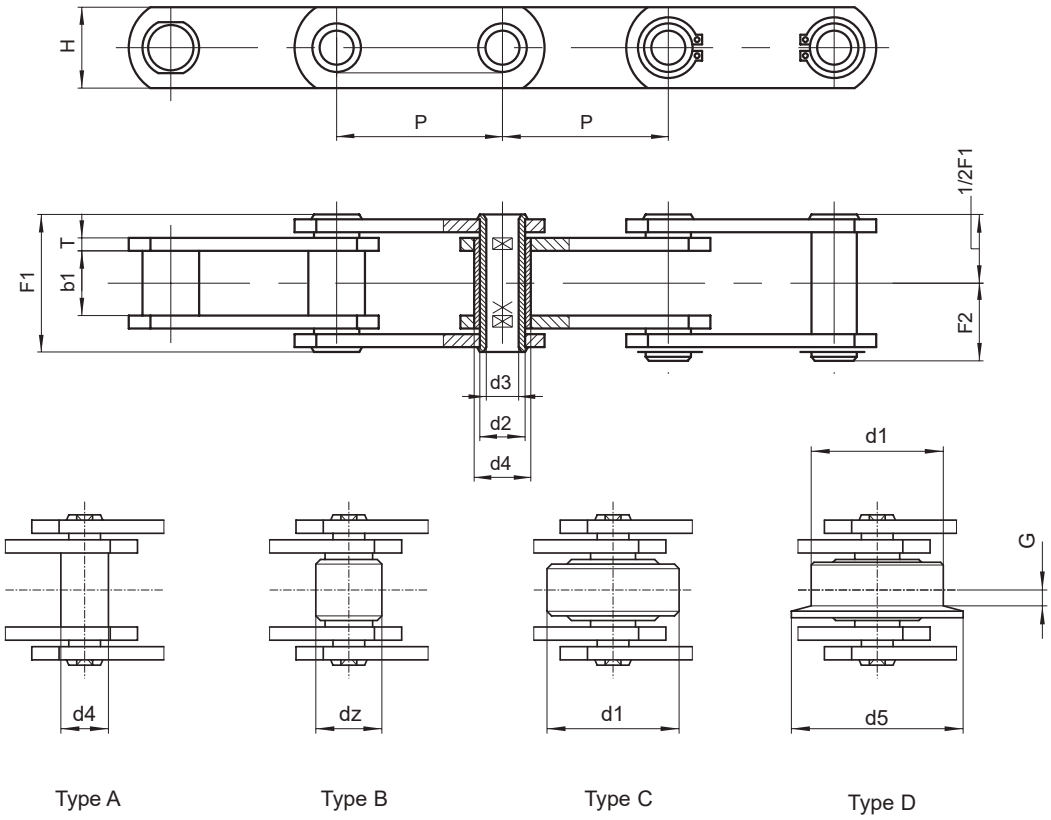

Type A Type B Type C Type D

	P	b1	dz	d1	d5	G	d4	d3	d3	h2	T	F1	F2	Breaking load		Weight per meter
Chain N.	mm	mm	mm	mm	mm	mm	mm	mm	mm	mm	mm	mm	mm	N	N*	Kg/m**
MC 112	80	32	42	70	85	8,5	29	22	14,3	50	6	62,5	33	112.000	180.000	16,6
	100	"	"	"	"	"	"	"	"	"	"	"	"	"	"	14
	125	"	"	"	"	"	"	"	"	"	"	"	"	"	"	11,2
	160	"	"	"	"	"	"	"	"	"	"	"	"	"	"	10,2
	200	"	"	"	"	"	"	"	"	"	"	"	"	"	"	8,9
	250	"	"	"	"	"	"	"	"	"	"	"	"	"	"	7,9
MC 224	125	43	60	100	120	10,5	42	30	20,3	70	8	83	44	224.000	350.000	32,3
	160	"	"	"	"	"	"	"	"	"	"	"	"	"	"	27,1
	200	"	"	"	"	"	"	"	"	"	"	"	"	"	"	23,5
	250	"	"	"	"	"	"	"	"	"	"	"	"	"	"	20,6
	315	"	"	"	"	"	"	"	"	"	"	"	"	"	"	17,2

(*) Breaking load with heat treated plates
(**) Weight for chain with roller "Type C"

Different options:

- Rollers made of nylon, delrin, etc.
- Pre-tensioned and labelled
- In STAINLESS steel
- Surface treatments of zinc plating, nickel plating, etc.

M Series Conveyor Chains

Series M

ISO 1977 DIN 8167 Series Conveyor Chains (M Series) with HIGH PLATES

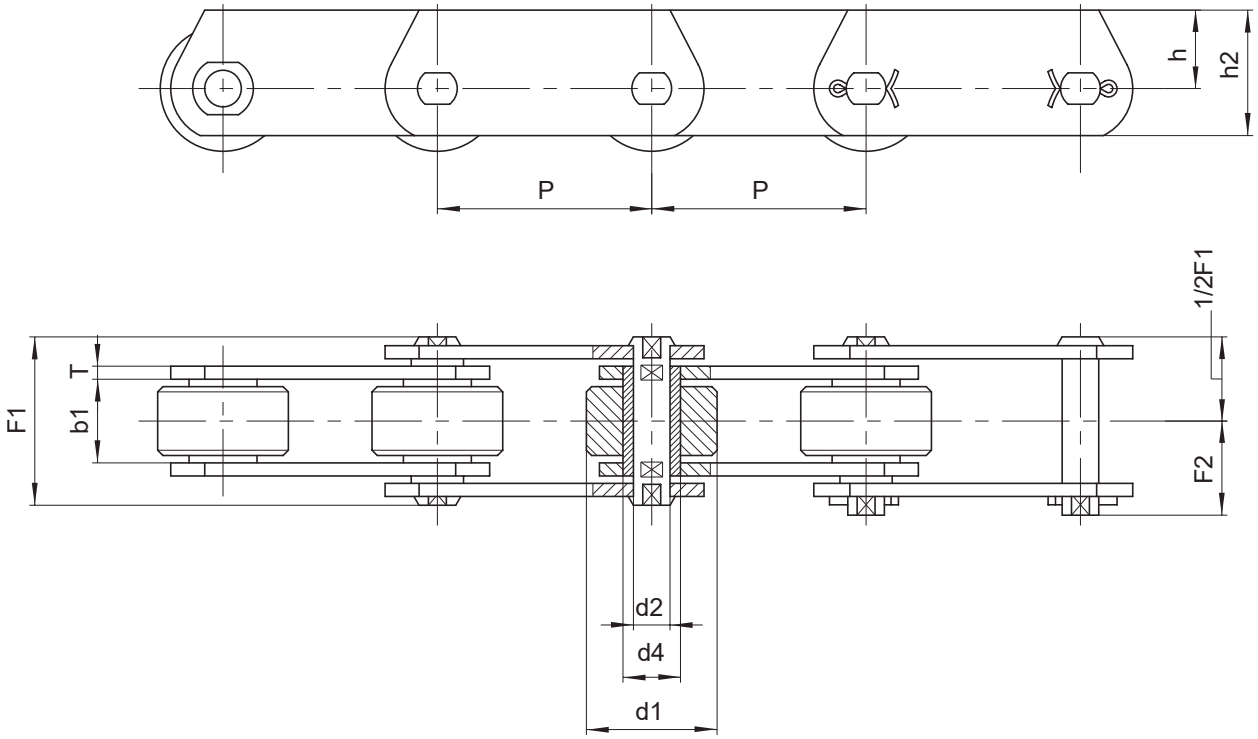

	P	b1	d1	d4	d2	h2	h	T	F1	F2	Breaking load		Weight per meter
Chain N.	mm	mm	mm	mm	mm	mm	mm	mm	mm	mm	N	N*	kg/m
ME 20	40	16	25	9	6	25	16	2,5	33	19	20.000	32.000	3
	50	"	"	"	"	"	"	"	"	"	"	"	2,6
	63	"	"	"	"	"	"	"	"	"	"	"	2,3
	80	"	"	"	"	"	"	"	"	"	"	"	2
ME 28	50	18	30	10	7	30	20	3	36	20,5	28.000	42.000	4,1
	63	"	"	"	"	"	"	"	"	"	"	"	3,5
	80	"	"	"	"	"	"	"	"	"	"	"	3,1
	100	"	"	"	"	"	"	"	"	"	"	"	2,8
ME 40	63	20	36	11	8	35	22,5	4	40,5	24	40.000	60.000	5,5
	80	"	"	"	"	"	"	"	"	"	"	"	4,8
	100	"	"	"	"	"	"	"	"	"	"	"	4,2
	125	"	"	"	"	"	"	"	"	"	"	"	3,7

(*) Breaking load with heat treated plates

Different options:

- Rollers made of nylon, delrin, etc.
- Pre-tensioned and labelled
- In STAINLESS steel
- Surface treatments of zinc plating, nickel plating, etc.

M Series Conveyor Chains

Series M

ISO 1977 DIN 8167 Series Conveyor Chains (M Series) with HIGH PLATES

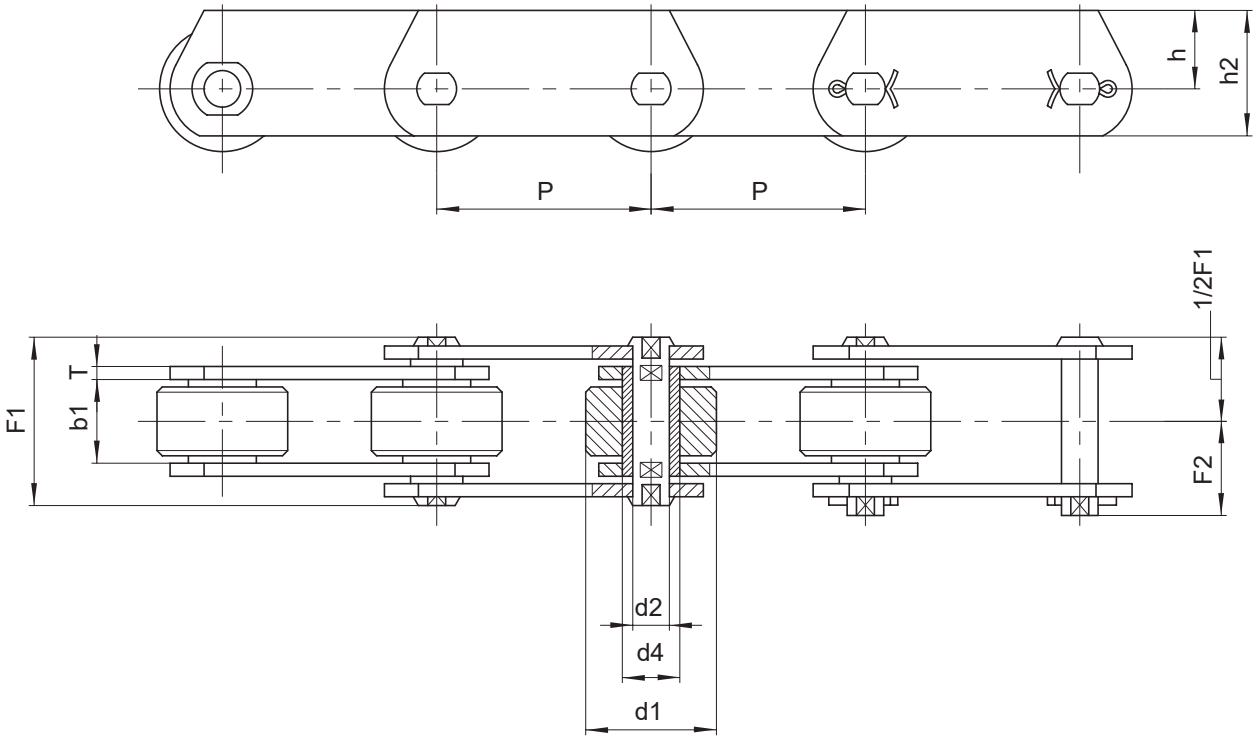

Chain N.	P	b1	d1	d4	d2	h2	h	T	F1	F2	Breaking load		Weight per meter
	mm	mm	mm	mm	mm	mm	mm	mm	mm	mm	N	N*	kg/m
ME 56	63	24	42	15	10	45	30	4	45	26	56.000	85.000	8,3
	80	"	"	"	"	"	"	"	"	"	"	"	7
	100	"	"	"	"	"	"	"	"	"	"	"	6,1
	125	"	"	"	"	"	"	"	"	"	"	"	5,4
ME 80	80	28	50	18	12	50	32,5	5	54,5	30,5	80.000	125.000	11
	100	"	"	"	"	"	"	"	"	"	"	"	9,5
	125	"	"	"	"	"	"	"	"	"	"	"	8,5
	160	"	"	"	"	"	"	"	"	"	"	"	7,2
	200	"	"	"	"	"	"	"	"	"	"	"	6
ME 112	80	32	60	21	15	60	40	6	63	36	112.000	175.000	17
	100	"	"	"	"	"	"	"	"	"	"	"	14,5
	125	"	"	"	"	"	"	"	"	"	"	"	13
	160	"	"	"	"	"	"	"	"	"	"	"	11
	200	"	"	"	"	"	"	"	"	"	"	"	10

(*) Breaking load with heat treated plates

Different options:

- Rollers made of nylon, delrin, etc.
- Pre-tensioned and labelled
- In STAINLESS steel
- Surface treatments of zinc plating, nickel plating, etc.

M Series Conveyor Chains

Series M

ISO 1977 DIN 8167 Series Conveyor Chains (M Series) with HIGH PLATES

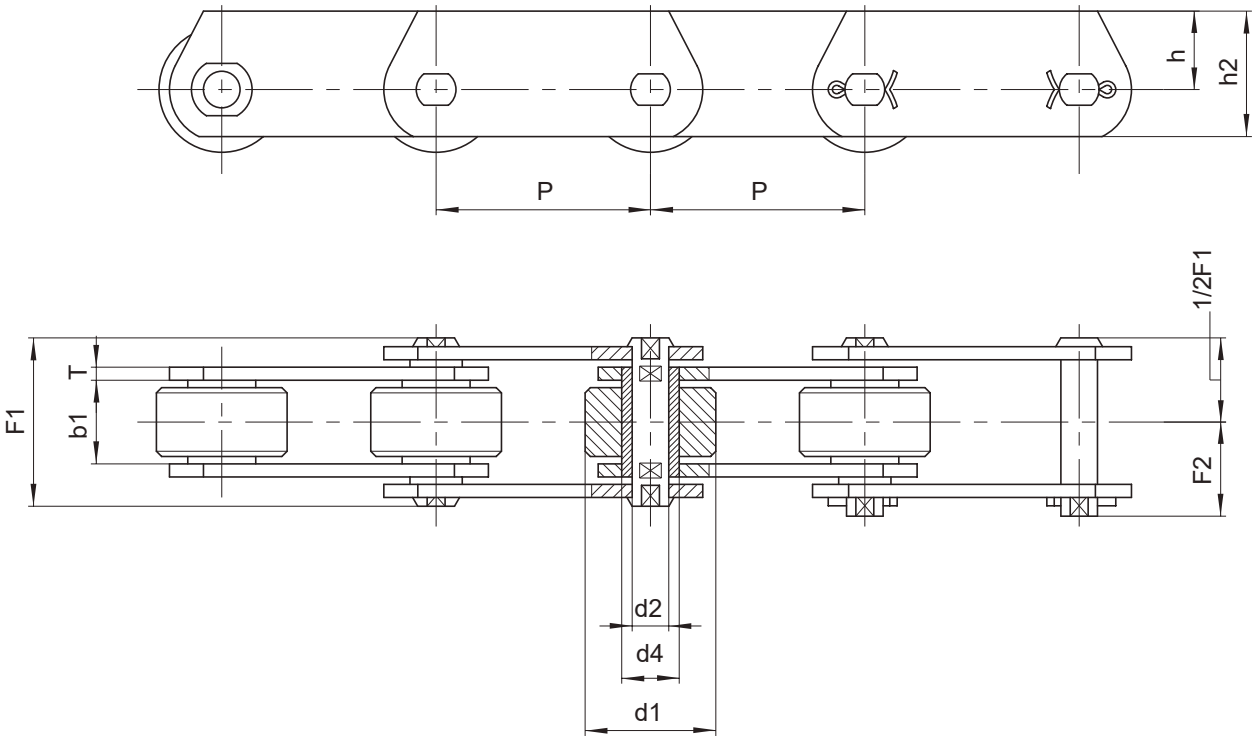

Chain N.	P	b1	d1	d4	d2	h2	h	T	F1	F2	Breaking load		Weight per meter
	mm	mm	mm	mm	mm	mm	mm	mm	mm	mm	N	N*	kg/m
ME 160	100	37	70	25	18	70	45	7	72	41,5	160.000	260.000	21,5
	125	"	"	"	"	"	"	"	"	"	"	"	19
	160	"	"	"	"	"	"	"	"	"	"	"	17
	200	"	"	"	"	"	"	"	"	"	"	"	15
	250	"	"	"	"	"	"	"	"	"	"	"	13,5
ME 224	125	43	85	30	21	90	60	8	84	47	224.000	340.000	32,5
	160	"	"	"	"	"	"	"	"	"	"	"	27,5
	200	"	"	"	"	"	"	"	"	"	"	"	23
	250	"	"	"	"	"	"	"	"	"	"	"	21
	315	"	"	"	"	"	"	"	"	"	"	"	19
ME 315	160	48	100	36	25	100	65	10	97	55	315.000	520.000	43
	200	"	"	"	"	"	"	"	"	"	"	"	37
	250	"	"	"	"	"	"	"	"	"	"	"	32
	315	"	"	"	"	"	"	"	"	"	"	"	28,6
	400	"	"	"	"	"	"	"	"	"	"	"	25,5

(*) Breaking load with heat treated plates

Different options:

- Rollers made of nylon, delrin, etc.
- Pre-tensioned and labelled
- In STAINLESS steel
- Surface treatments of zinc plating, nickel plating, etc.

M Series Conveyor Chains

Series M

ISO 1977 DIN 8167 Series Conveyor Chains (M Series) with HIGH PLATES

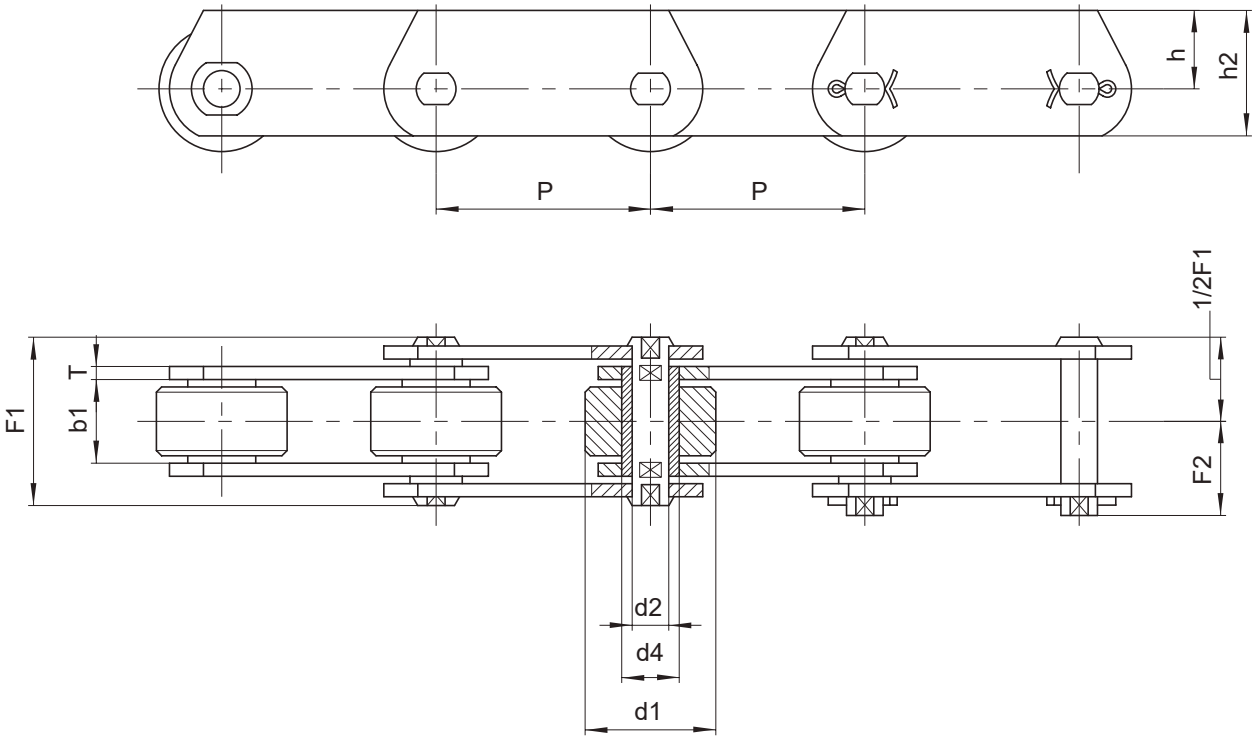

Chain N.	P	b1	d1	d4	d2	h2	h	T	F1	F2	Breaking load		Weight per meter
	mm	mm	mm	mm	mm	mm	mm	mm	mm	mm	N	N*	kg/m
ME 450	200	56	120	42	30	120	80	12	114	67	450.000	700.000	47
	250	"	"	"	"	"	"	"	"	"	"	"	41
	315	"	"	"	"	"	"	"	"	"	"	"	36
	400	"	"	"	"	"	"	"	"	"	"	"	32
ME 630	250	66	140	50	36	140	90	14	137	87,5	630.000	900.000	71
	315	"	"	"	"	"	"	"	"	"	"	"	62,5
	400	"	"	"	"	"	"	"	"	"	"	"	56
	500	"	"	"	"	"	"	"	"	"	"	"	50,6
	600	"	"	"	"	"	"	"	"	"	"	"	46,5
ME 900	250	78	170	60	44	180	120	16	153	95	900.000	1.250.000	108,5
	315	"	"	"	"	"	"	"	"	"	"	"	94,5
	400	"	"	"	"	"	"	"	"	"	"	"	82,5
	500	"	"	"	"	"	"	"	"	"	"	"	73,8
	600	"	"	"	"	"	"	"	"	"	"	"	66,7

(*) Breaking load with heat treated plates

Different options:

- Rollers made of nylon, delrin, etc.
- Pre-tensioned and labelled
- In STAINLESS steel
- Surface treatments of zinc plating, nickel plating, etc.

Z Series Conveyor Chains

Series Z

BS 4116 Series Conveyor Chains, PART 4 (Z Series) with SOLID PINS

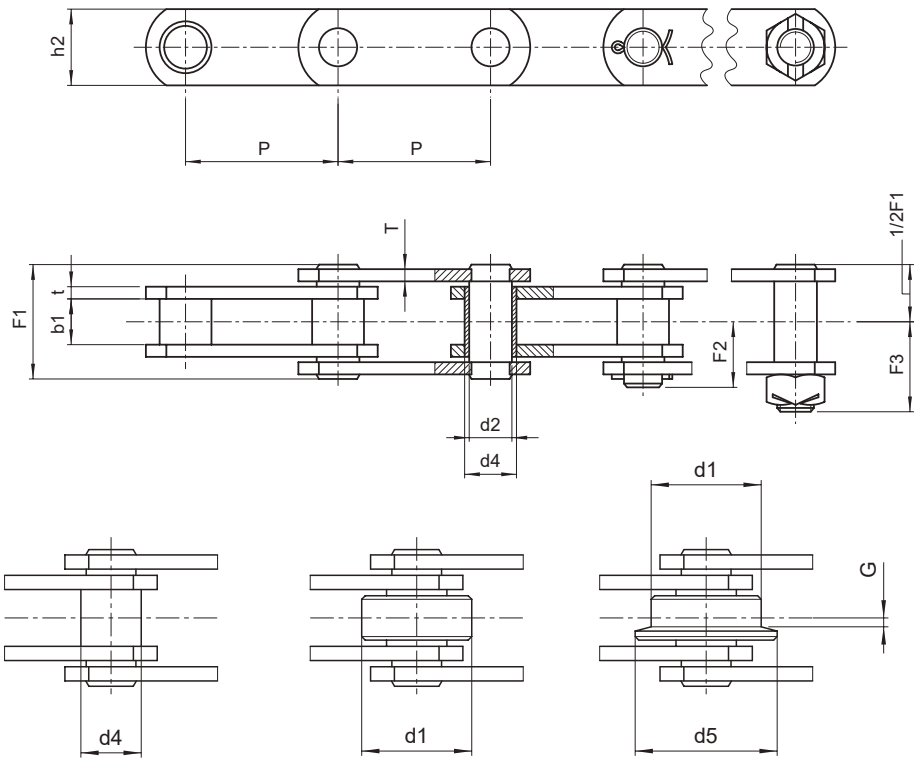

Type A Type C Type D

Chain N.	P inches	P mm	b1 mm	d1 mm	d5 mm	G mm	d4 mm	d2 mm	h2 mm	t mm	T mm	F1 mm	F2 mm	F3 mm	Breaking load N	Breaking load N*	Weight per meter kg/m type A	Weight per meter kg/m type C	Weight per meter kg/m type D
Z40	2	50,8	15	31,75	40	2,5	17	14	25	4	4	37	22	28,5	40.000	50.000	3	4,2	4,4
	2,5	63,5	"	"	"	"	"	"	"	"	"	"	"	"	"	"	2.8	3,8	3,9
	3	76,2	"	"	"	"	"	"	"	"	"	"	"	"	"	"	2,5	3,3	3,4
	3,5	88,9	"	"	"	"	"	"	"	"	"	"	"	"	"	"	2,4	3,1	3,2
	4	101,6	"	"	"	"	"	"	"	"	"	"	"	"	"	"	2,3	2,9	3
	5	127	"	"	"	"	"	"	"	"	"	"	"	"	"	"	2,1	2,6	2,7
	6	152,4	"	"	"	"	"	"	"	"	"	"	"	"	"	"	1,9	2,4	2,5
Z100	3	76,2	19	47,5	60	3,5	23**	19	40	5	4	45	28	37	100.000	130.000	4,9	7,7	8,2
	3,5	88,9	"	"	"	"	"	"	"	"	"	"	"	"	"	"	4,7	7,1	7,5
	4	101,6	"	"	"	"	"	"	"	"	"	"	"	"	"	"	4,6	6,5	7
	5	127	"	"	"	"	"	"	"	"	"	"	"	"	"	"	4,3	4,6	6,2
	6	152,4	"	"	"	"	"	"	"	"	"	"	"	"	"	"	4,1	5,2	5,7
	7	177,8	"	"	"	"	"	"	"	"	"	"	"	"	"	"	3,9	4,8	5,2
	8	203,2	"	"	"	"	"	"	"	"	"	"	"	"	"	"	3,8	4,6	5

(*) Breaking load for heat treated plates
(**) 24 mm diameter for "Type A" chain

Different options:

- Metric pitch
- Nylon, delrin, etc., rollers
- With extended pins
- Pre-tensioned and labelled
- In STAINLESS steel
- Surface treatments of zing plating, nickel plating, etc.

Z Series Conveyor Chains

Series Z

BS 4116 Series Conveyor Chains, PART 4 (Z Series) with SOLID PINS

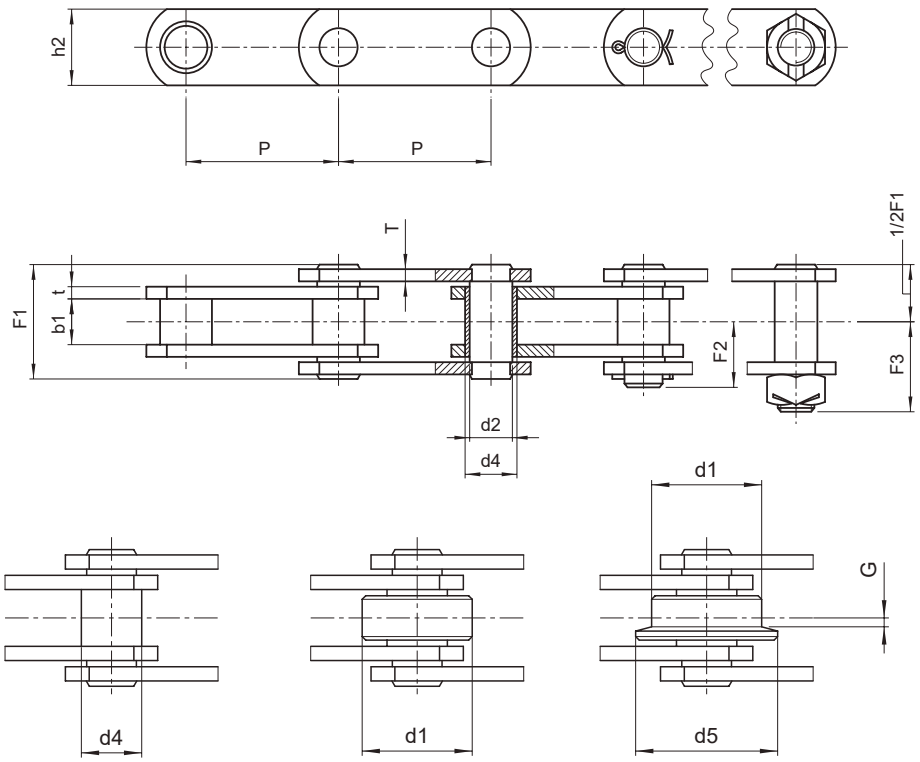

Tipo A Tipo C Tipo D

Chain N.	P inches	P mm	b1 mm	d1 mm	d5 mm	G mm	d4 mm	d2 mm	h2 mm	t mm	T mm	F1 mm	F2 mm	F3 mm	Breaking load N	Breaking load N*	Weight per meter kg/m type A	Weight per meter kg/m type C	Weight per meter kg/m type D
Z160	4	101,6	26	66,7	82	3,5	33	26,9	50	7	5	58	34,5	51	156.000	200.000	8,8	13,7	14,9
	5	127	"	"	"	"	"	"	"	"	"	"	"	"	"	"	8	11,8	12,8
	6	152,4	"	"	"	"	"	"	"	"	"	"	"	"	"	"	7,5	10,8	11,5
	7	177,8	"	"	"	"	"	"	"	"	"	"	"	"	"	"	7	9,8	10,5
	8	203,2	"	"	"	"	"	"	"	"	"	"	"	"	"	"	6,7	9,2	9,7
	9	228,6	"	"	"	"	"	"	"	"	"	"	"	"	"	"	6	8,9	9,1
	10	254	"	"	"	"	"	"	"	"	"	"	"	"	"	"	5,6	7,6	8
Z300	6	152,4	38	88,9	114	8,5	38	32	60	10	8	84	52	71	300.000	380.000	14,7	24,3	26
	7	177,8	"	"	"	"	"	"	"	"	"	"	"	"	"	"	13,7	22	23,5
	8	203,2	"	"	"	"	"	"	"	"	"	"	"	"	"	"	13,1	20,5	21,6
	10	254	"	"	"	"	"	"	"	"	"	"	"	"	"	"	12,2	18	19
	12	304,8	"	"	"	"	"	"	"	"	"	"	"	"	"	"	11,6	16,5	17,5

(*) Breaking load with heat treated plates

Different options:

- Metric pitch
- Nylon, delrin, etc., rollers
- With extended pins
- Pre-tensioned and labelled
- In STAINLESS steel
- Surface treatments of zing plating, nickel plating, etc.

Z Series Conveyor Chains

Series Z

BS 4116 Series Conveyor Chains, PART 4 (Z Series) with ATTACHMENTS

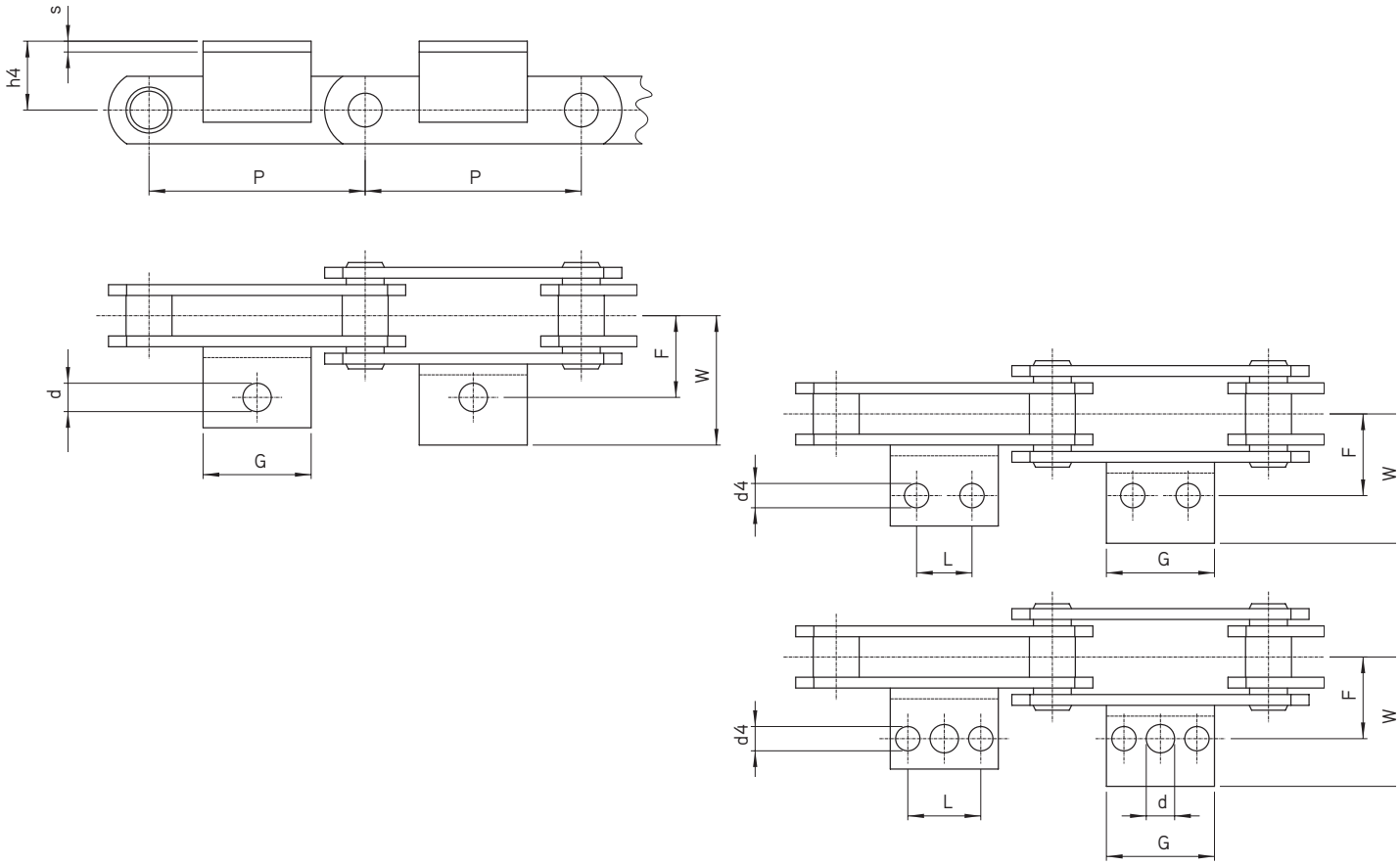

		P	h4	F	G	d	d4	W	L	Angle	Weight per meter Kg/m			Attachment additional weight
Chain N.		mm	mm	mm	mm	mm	mm	mm	mm	mm	type A	type C	type D	kg
Z40	■⌘	50,8	19	38,1	45	10,7	/	64,5	/	/	3	4,2	4,4	0,1
	■●	63,5	"	"	43	"	9,3	56	22,2	40x25x4	2,8	3,8	3,9	0,1
	♦⌘	76,2	"	"	"	"	"	68	"	/	2,5	3,3	3,4	0,1
	♦	88,9	"	"	50	"	"	56	31,8	40x25x4	2,4	3,1	3,2	0,1
	♦⌘	101,6	"	"	64	"	"	55	"	/	2,3	2,9	3	0,1
	♦	127	"	"	84	"	"	56	57,2	40x25x4	2,1	2,6	2,7	0,2
	♦	152,4	"	"	"	"	"	"	"	"	1,9	2,4	2,5	0,2
Z100	■	76,2	32	44,5	30	14	/	65	/	45x5	4,9	7,7	8,2	0,1
	■	88,9	"	"	"	"	/	"	/	"	4,7	7,1	7,5	0,1
	●⌘	101,6	"	"	64	"	10,5	"	31,8	/	4,6	6,5	7	0,1
	■●	127	"	"	84	"	"	"	57,2	45x5	4,3	5,6	6,2	0,3
	●⌘	152,4	"	"	114,5	"	"	"	"	/	4,1	5,2	5,7	0,3
	■●	177,8	"	"	110	"	"	"	80	45x5	3,9	4,8	5,2	0,4
	■●	203,2	"	"	"	"	"	"	"	"	3,8	4,6	5	0,4

■ Attachments with 1 hole
● Attachments with 2 holes
♦ Attachments with 3 holes
⌘ Integral attachments

Z Series Conveyor Chains

Series Z

BS 4116 Series Conveyor Chains, PART 4 (Z Series) with ATTACHMENTS

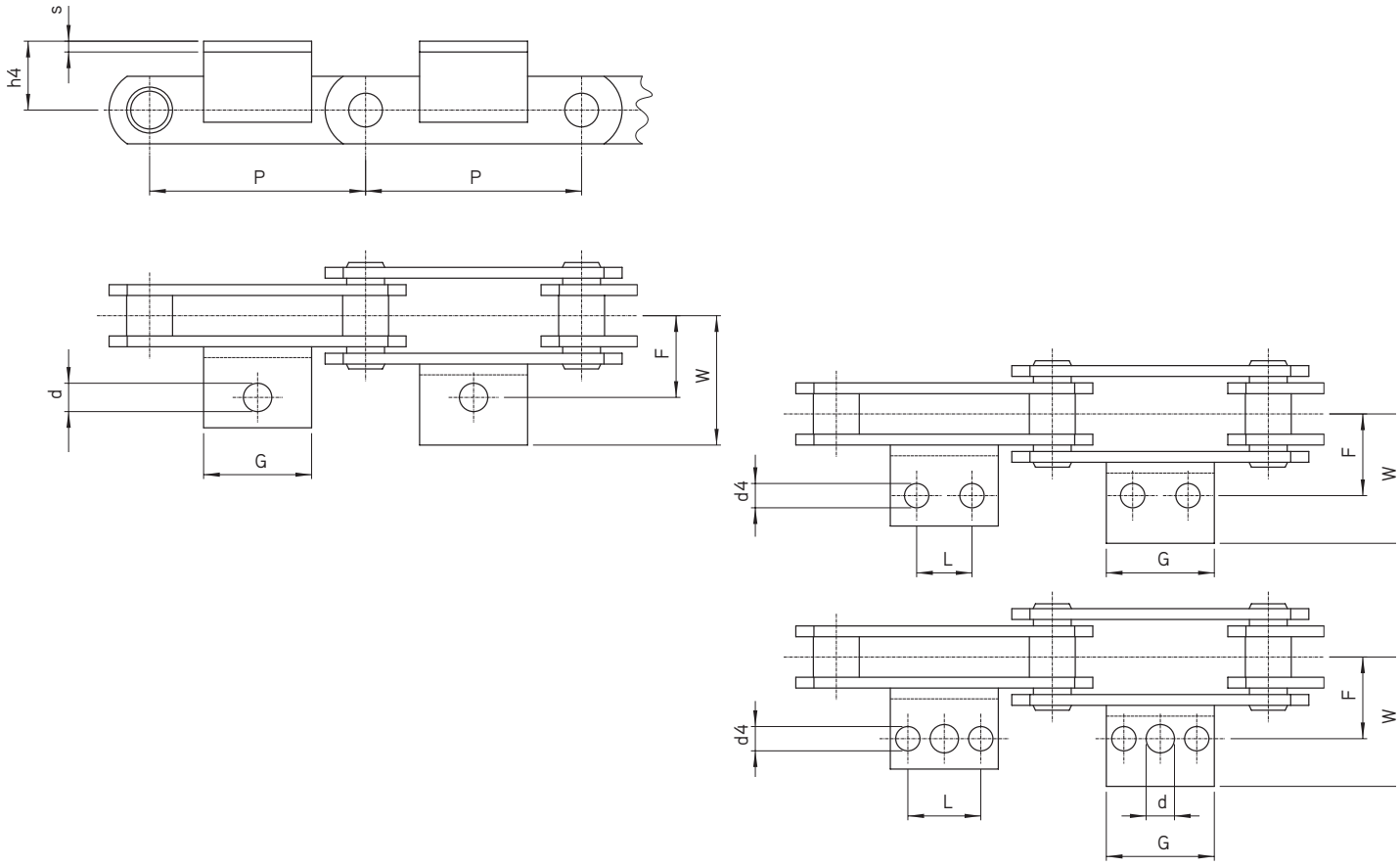

		P	h4	F	G	d	d4	W	L	Angle	Weight per meter Kg/m			Attachment additional weight
Chain N.		mm	mm	mm	mm	mm	mm	mm	mm	mm	tipo A	tipo C	tipo D	kg
Z160	■	101,6	38	54	35	15,5	/	77	/	/	8,8	13,7	14,9	0,2
	■●	127	"	"	56	"	12,3	"	31,7	50x6	8	11,8	12,8	0,3
	■●	152,4	"	"	84	"	"	"	57,2	"	7,5	10,8	11,5	0,4
	■●	177,8	"	"	"	"	"	"	"	"	7	9,8	10,5	0,4
	■●	203,2	"	"	130	"	"	"	100	"	6,7	9,2	9,7	0,6
	■●	228,6	"	"	150	"	"	"	"	"	6	8,9	9,1	0,7
	■●	254	"	"	170	"	"	"	135	"	5,6	7,6	8	0,7
Z300	■	152,4	51	73	70	17	14	100	38,1	60x8	14,7	24,3	26,0	0,5
	■	177,8	"	"	"	"	"	"	"	"	13,7	22,0	23,5	0,5
	■●	203,2	"	"	100	"	"	"	76,2	"	13,1	20,5	21,6	0,7
	■●	254	"	"	152,4	"	"	"	90	"	12,2	18,0	19,0	0,9
	■●	304,8	"	"	225	"	"	"	190	"	11,6	16,5	17,5	1,6

■ Attachments with 1 hole
● Attachments with 2 holes

Z Series Conveyor Chains

Series Z

BS 4116 Series Conveyor Chains, PART 4 (Z Series) with HOLLOW PINS

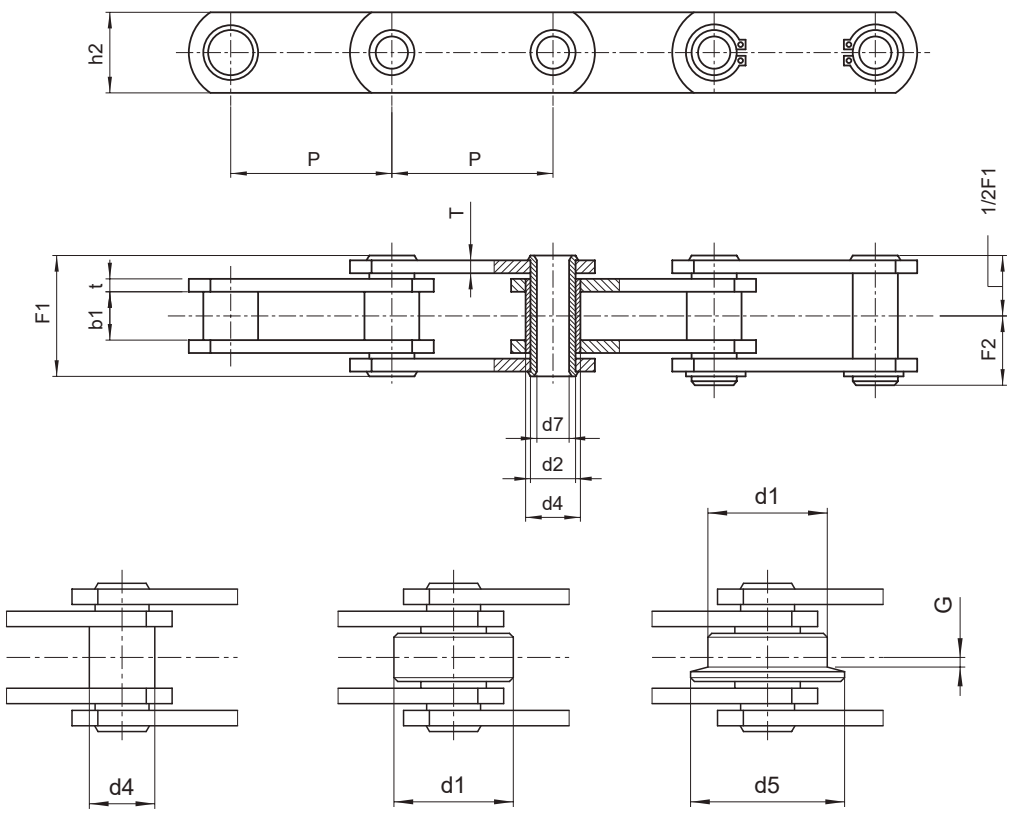

	P	P	b1	d1	d5	G	d4	d2	d7	h2	t	T	F1	F2	Breaking load		Weight per meter
Chain N.	inches	mm	mm	mm	mm	mm	mm	mm	mm	mm	mm	mm	mm	mm	N	N*	kg/m**
ZC21	1,5	38,1	12,7	25,4	/	/	11	9	6,5	18	2,5	2,5	26	14,5	21.000	/	2,1
	2	50,8	"	"	"	"	"	"	"	"	"	"	"	"	"	"	1,7
	2,5	63,5	"	"	"	"	"	"	"	"	"	"	"	"	"	"	1,6
	3	76,2	"	"	"	"	"	"	"	"	"	"	"	"	"	"	1,4
ZC40	2	50,8	15	31,75	40	2,5	17	14	10,2	25	4	4	36,4	19,5	40.000	50.000	3,6
	2,5	63,5	"	"	"	"	"	"	"	"	"	"	"	"	"	"	3,3
	3	76,2	"	"	"	"	"	"	"	"	"	"	"	"	"	"	3
	3,5	88,9	"	"	"	"	"	"	"	"	"	"	"	"	"	"	2,8
	4	101,6	"	"	"	"	"	"	"	"	"	"	"	"	"	"	2,6
	5	127	"	"	"	"	"	"	"	"	"	"	"	"	"	"	2,4
	6	152,4	"	"	"	"	"	"	"	"	"	"	"	"	"	"	2,3

(*) Breaking load with heat treated plates
(**) Weight for chain with roller"Type C"

Different options:

- Metric pitch
- Rollers made of nylon, delrin, etc.
- Pre-tensioned and labelled
- In STAINLESS steel
- Surface treatmentsof zinc plating, nickel plating, etc.

Z Series Conveyor Chains

Series Z

BS 4116 Series Conveyor Chains, PART 4 (Z Series) with HOLLOW PINS

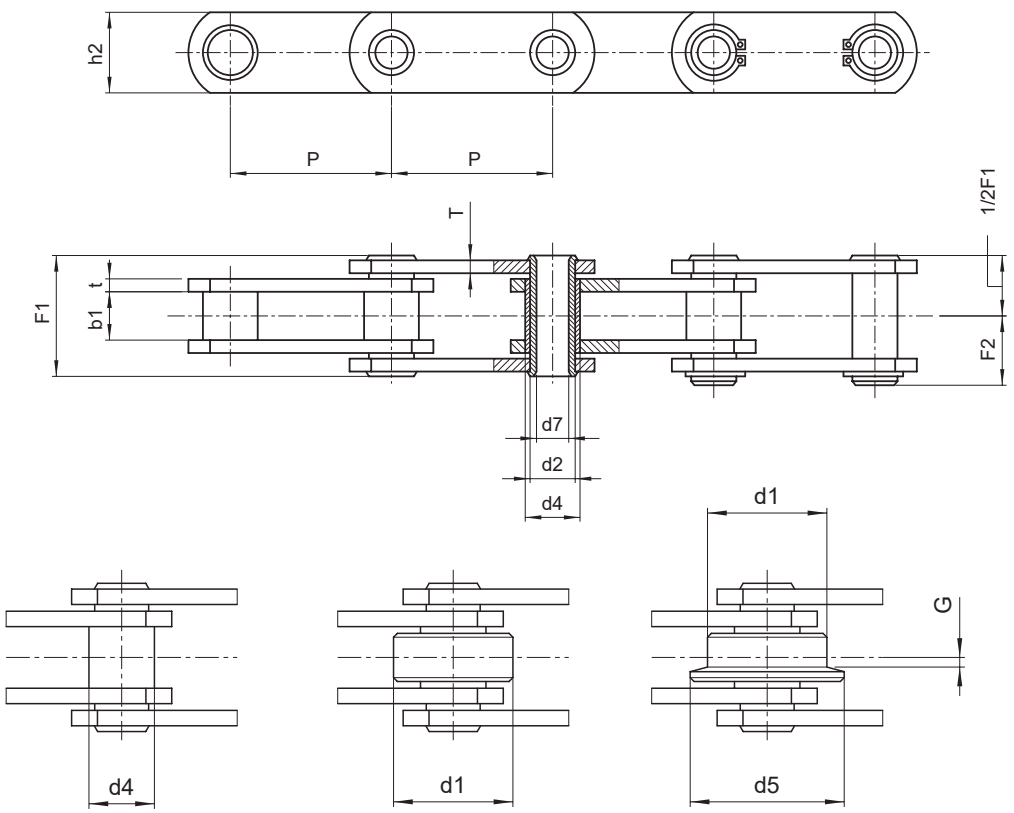

	P	P	b1	d1	d5	G	d4	d2	d7	h2	t	T	F1	F2	Breaking load		Weight per meter
Chain N.	inches	mm	mm	mm	mm	mm	mm	mm	mm	mm	mm	mm	mm	mm	N	N*	kg/m**
ZC60	3	76,2	19	47,5	60	3,5	23	19	13,2	40	5	4	45	23,5	60.000	120.000	6,9
	3,5	88,9	"	"	"	"	"	"	"	"	"	"	"	"	"	"	6,4
	4	101,6	"	"	"	"	"	"	"	"	"	"	"	"	"	"	5,9
	5	127	"	"	"	"	"	"	"	"	"	"	"	"	"	"	5,3
	6	152,4	"	"	"	"	"	"	"	"	"	"	"	"	"	"	4,9
	7	177,8	"	"	"	"	"	"	"	"	"	"	"	"	"	"	4,6
	8	203,2	"	"	"	"	"	"	"	"	"	"	"	"	"	"	4,4
ZC150	4	101,6	26	66,7	82	4	33	26,9	20,2	50	7	5	58	31,5	150.000	190.000	12
	5	127	"	"	"	"	"	"	"	"	"	"	"	"	"	"	10,8
	6	152,4	"	"	"	"	"	"	"	"	"	"	"	"	"	"	9,8
	7	177,8	"	"	"	"	"	"	"	"	"	"	"	"		"	9
	8	203,2	"	"	"	"	"	"	"	"	"	"	"	"	"	"	8,5
	9	228,6	"	"	"	"	"	"	"	"	"	"	"	"	"	"	8,2
	10	254	"	"	"	"	"	"	"	"	"	"	"	"	"	"	7,7
ZC300	6	152,4	38	88,9	114	8,5	38	32	22,5	60	10	8	83	43,5	300.000	380.000	22,1
	7	177,8	"	"	"	"	"	"	"	"	"	"	"	"	"	"	20
	8	203,2	"	"	"	"	"	"	"	"	"	"	"	"	"	"	18,6
	10	254	"	"	"	"	"	"	"	"	"	"	"	"	"	"	16,4
	12	304,8	"	"	"	"	"	"	"	"	"	"	"	"	"	"	15,3

(*) Breaking load with heat treated plates
(**) Weight for chain with roller"Type C

Different options:

- Metric pitch
- Rollers made of nylon, delrin, etc.
- Pre-tensioned and labelled
- In STAINLESS steel
- Surface treatments zinc plating, nickel plating, etc.

Z Series Conveyor Chains

Series Z

BS 4116 Series Conveyor Chains, PART 4 (Z Series) with HIGH LINKS

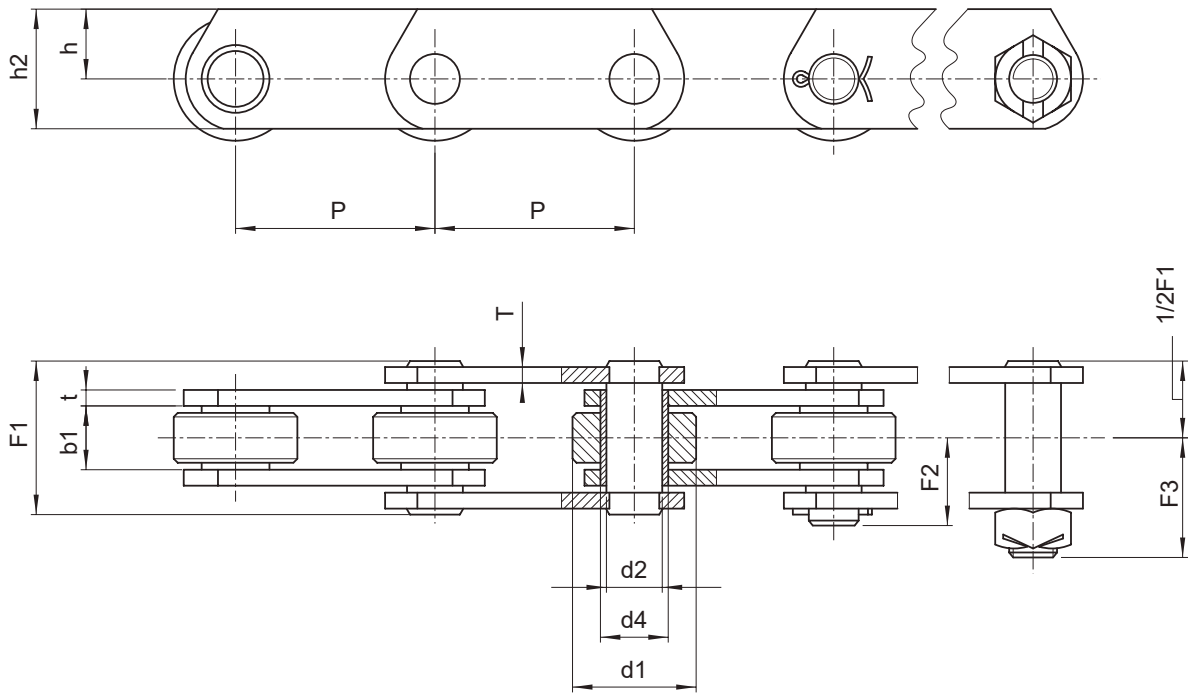

	P	P	b1	d1	d4	d2	h2	h	t	T	F1	F2	F3	Breaking load		Weight per meter
Chain N.	pulgadas	mm	mm	mm	mm	mm	mm	mm	mm	mm	mm	mm	mm	N	N*	kg/m
ZE40	2	50,8	15	31,75	17	14	40	27	4	4	37	22	28,5	40.000	60.000	5,6
	2,5	63,5	"	"	"	"	"	"	"	"	"	"	"	"	"	5,1
	3	76,2	"	"	"	"	"	"	"	"	"	"	"	"	"	4,4
	3,5	88,9	"	"	"	"	"	"	"	"	"	"	"	"	"	4,1
	4	101,6	"	"	"	"	"	"	"	"	"	"	"	"	"	3,9
	5	127	"	"	"	"	"	"	"	"	"	"	"	"	"	3,6
	6	152,4	"	"	"	"	"	"	"	"	"	"	"	"	"	3,3
ZE100	3	76,2	19	47,5	23	19	50	30	5	4	45	28	37	100.000	160.000	9,2
	3,5	88,9	"	"	"	"	"	"	"	"	"	"	"	"	"	8,5
	4	101,6	"	"	"	"	"	"	"	"	"	"	"	"	"	7,8
	5	127	"	"	"	"	"	"	"	"	"	"	"	"	"	6,9
	6	152,4	"	"	"	"	"	"	"	"	"	"	"	"	"	6,4
	7	177,8	"	"	"	"	"	"	"	"	"	"	"	"	"	6
	8	203,2	"	"	"	"	"	"	"	"	"	"	"	"	"	5,7

(*) Breaking load with heat treated plates

Different options:

- Rollers made of nylon, delrin, etc.
- Pre-tensioned and labelled
- In STAINLESS steel
- Surface treatments zinc plating, nickel plating, etc.

Z Series Conveyor Chains

Series Z

BS 4116 Series Conveyor Chains, PART 4 (Z Series) with HIGH LINKS

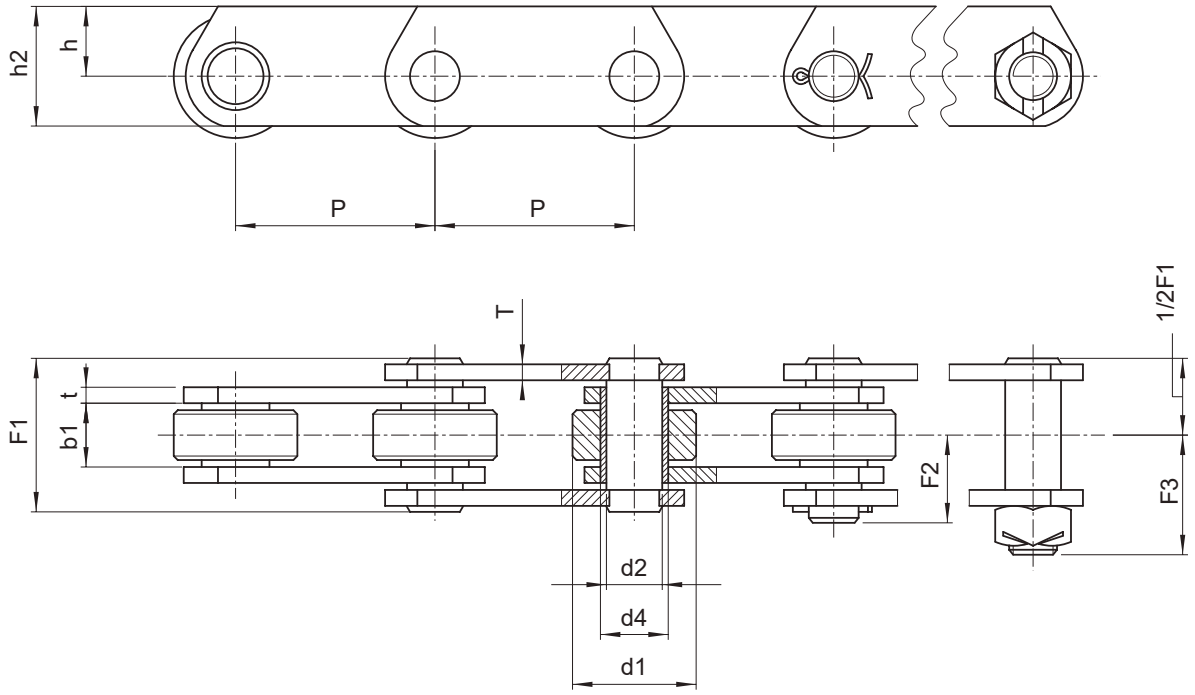

	P	P	b1	d1	d4	d2	h2	h	t	T	F1	F2	F3	Breaking load		Weight per meter
Chain N.	pulgadas	mm	mm	mm	mm	mm	mm	mm	mm	mm	mm	mm	mm	N	N*	kg/m
ZE160	4	101,6	26	66,7	33	26,9	70	45	7	5	58	34,5	51	160.000	200.000	17,6
	5	127	"	"	"	"	"	"	"	"	"	"	"	"	"	15,4
	6	152,4	"	"	"	"	"	"	"	"	"	"	"	"	"	13,9
	7	177,8	"	"	"	"	"	"	"	"	"	"	"	"	"	12,9
	8	203,2	"	"	"	"	"	"	"	"	"	"	"	"	"	12,1
	9	228,6	"	"	"	"	"	"	"	"	"	"	"	"	"	11,5
	10	254	"	"	"	"	"	"	"	"	"	"	"	"	"	11
ZE300	6	152,4	38	88,9	38	32	90	60	10	8	84	52	71	300.000	380.000	32,2
	7	177,8	"	"	"	"	"	"	"	"	"	"	"	"	"	29,4
	8	203,2	"	"	"	"	"	"	"	"	"	"	"	"	"	27,3
	10	254	"	"	"	"	"	"	"	"	"	"	"	"	"	24,4
	12	304,8	"	"	"	"	"	"	"	"	"	"	"	"	"	22,5

(*) Breaking load with heat treated plates

Different options:

- Rollers made of nylon, delrin, etc.
- Pre-tensioned and labelled
- In STAINLESS steel
- Surface treatments zinc plating, nickel plating, etc.

C Series Conveyor Chains

Series C

DIN 8165 Series (Series C) Conveyor Chains with SOLID PINS

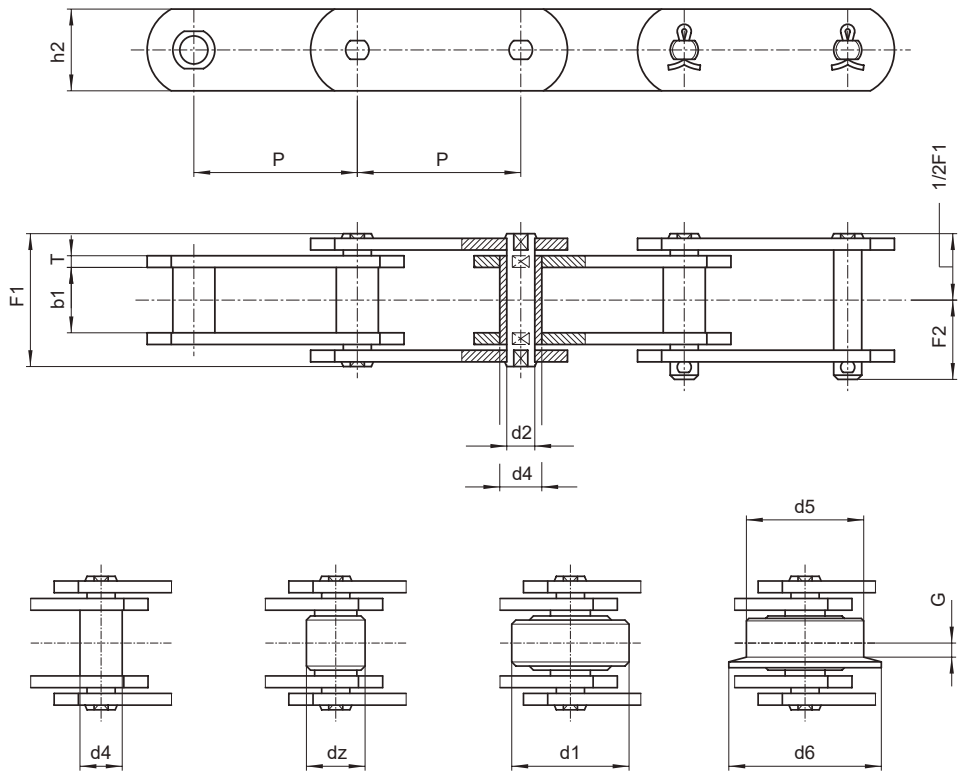

Type A Type B Type C Type D

	P	b1	dz	d1	d5	d6	G	d4	d2	h2	T	F1	F2	Breaking load		Weight per meter kg/m			
DIN N.	mm	mm	mm	mm	mm	mm	mm	mm	mm	mm	mm	mm	mm	N	N*	type A	type B	type C	type D
FV40	50	18	20	32	40	50	4	15	10	25	3	36	21	42.000	47.000	2,4	2,9	4	5,6
	63	"	"	"	"	"	"	"	"	"	"	"	"	"	"	2	2,4	3,3	4,5
	80	"	"	"	"	"	"	"	"	"	"	"	"	"	"	1,9	2,2	3	3,9
	100	"	"	"	"	"	"	"	"	"	"	"	"	"	"	1,7	2	2,6	3,3
	125	"	"	"	"	"	"	"	"	"	"	"	"	"	"	1,6	1,9	2,3	3
FV63	63	22	26	40	50	63	5	18	12	30	4	45	26	64.000	75.000	3,8	4,5	6,4	8,9
	80	"	"	"	"	"	"	"	"	"	"	"	"	"	"	3,2	3,8	5,3	7,2
	100	"	"	"	"	"	"	"	"	"	"	"	"	"	"	3	3,5	4,7	6,2
	125	"	"	"	"	"	"	"	"	"	"	"	"	"	"	2,7	3	4	5,3
	160	"	"	"	"	"	"	"	"	"	"	"	"	"	"	2,4	2,7	3,5	4,4

(*) Breaking load with heat treated plates

Different options:

- Nylon, delrin, etc., rollers
- With extended pins

- In STAINLESS steel
- Surface treatments such as galvanizing, nickel plating, etc
.- Pretensioned and labelled

C Series Conveyor Chains

Series C

DIN 8165 Series (Series C) Conveyor Chains with SOLID PINS

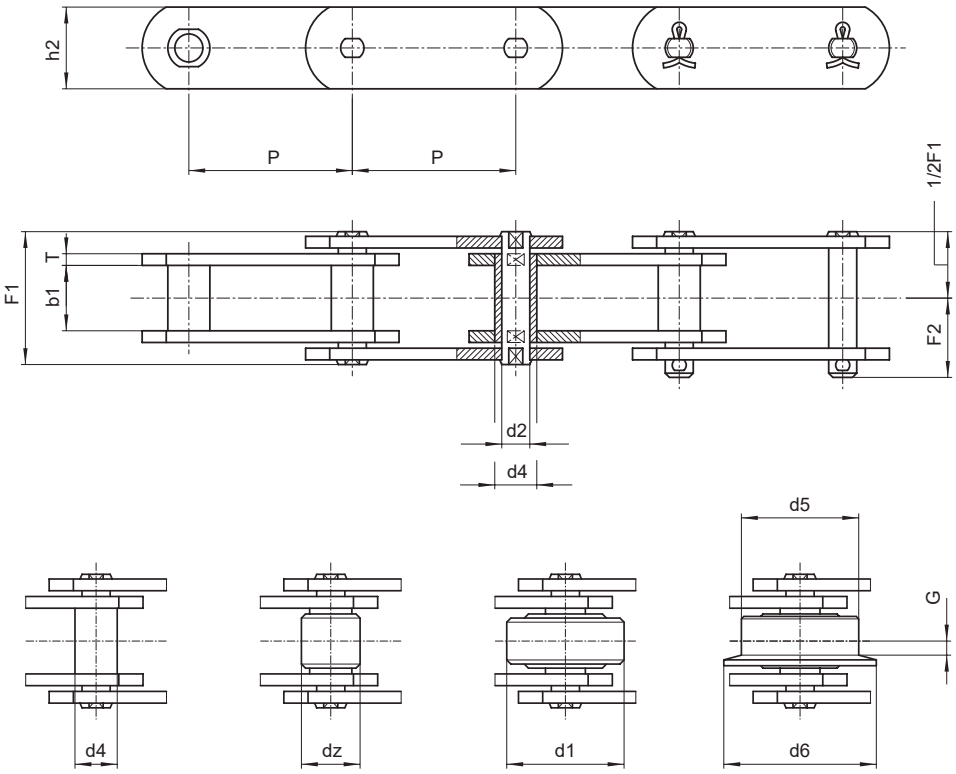

Type A Type B Type C Type D

	P	b1	dz	d1	d5	d6	G	d4	d2	h2	T	F1	F2	Breaking load		Weight per meter kg/m			
DIN N.	mm	mm	mm	mm	mm	mm	mm	mm	mm	mm	mm	mm	mm	N	N*	type A	type B	type C	type D
FV90	63	25	30	48	63	78	6,5	20	14	35	5	53	30	100.000	115.000	5,6	6,8	10	14,7
	80	"	"	"	"	"	"	"	"	"	"	"	"	"	"	5,1	6	8,6	12,3
	100	"	"	"	"	"	"	"	"	"	"	"	"	"	"	4,5	5,3	7,3	10,3
	125	"	"	"	"	"	"	"	"	"	"	"	"	"	"	4,2	4,8	6,5	8,8
	160	"	"	"	"	"	"	"	"	"	"	"	"	"	"	4	4,5	5,8	7,6
	200	"	"	"	"	"	"	"	"	"	"	"	"	"	"	3,5	3,8	4,8	5,8
	250	"	"	"	"	"	"	"	"	"	"	"	"	"	"	3,4	3,7	4,6	5,4
FV112	100	30	32	55	72	90	7,5	22	16	40	6	62	35	120.000	170.000	6,7	7,7	11,2	18,8
	125	"	"	"	"	"	"	"	"	"	"	"	"	"	"	6	6,8	9,6	15,7
	160	"	"	"	"	"	"	"	"	"	"	"	"	"	"	5,5	6,1	8,3	13
	200	"	"	"	"	"	"	"	"	"	"	"	"	"	"	5,2	5,7	7,5	11,3
	250	"	"	"	"	"	"	"	"	"	"	"	"	"	"	4,9	5,3	6,7	9,8

(*) Breaking load with heat treated plates

Different options:

- Nylon, delrin, etc., rollers
- With extended pins
- In STAINLESS steel
- Surface treatments of zinc plating, nickel plating, etc.

C Series Conveyor Chains

Series C

DIN 8165 Series (Series C) Conveyor Chains with SOLID PINS

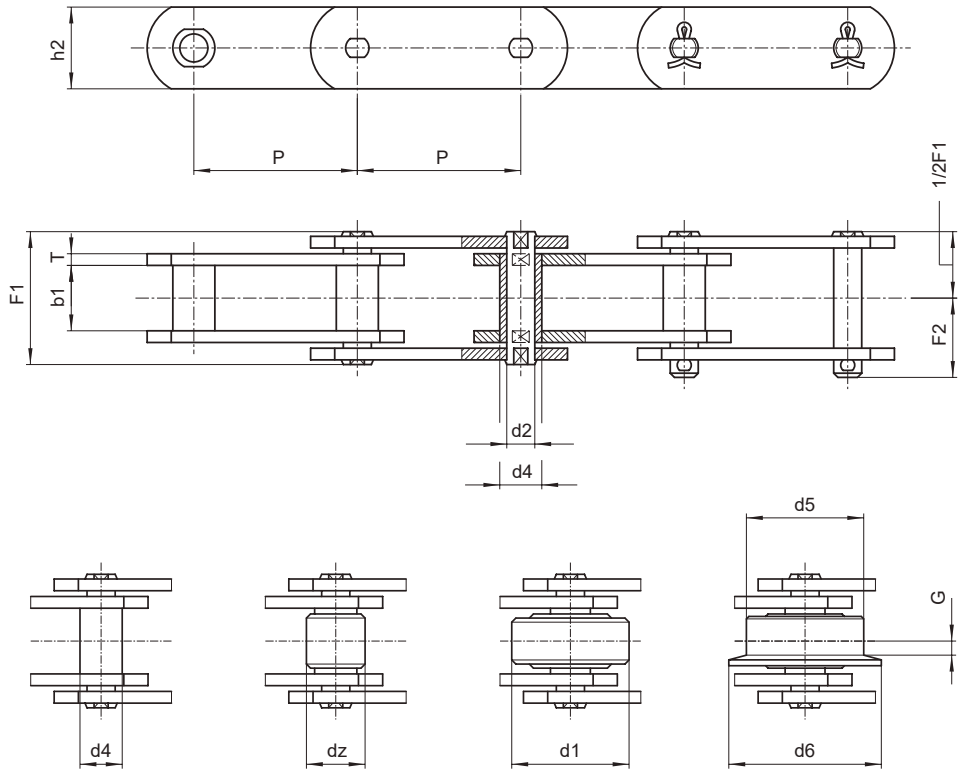

Type A Type B Type C Type D

	P	b1	dz	d1	d5	d6	G	d4	d2	h2	T	F1	F2	Breaking load		Weight per meter kg/m			
DIN N.	mm	mm	mm	mm	mm	mm	mm	mm	mm	mm	mm	mm	mm	N	N*	type A	type B	type C	type D
FV140	100	35	36	60	80	100	9	26	18	45	6	67	38	145.000	180.000	8,2	9,5	14,3	21,4
	125	"	"	"	"	"	"	"	"	"	"	"	"	"	"	7,4	8,5	12,3	18
	160	"	"	"	"	"	"	"	"	"	"	"	"	"	"	6,7	7,5	10,5	14,9
	200	"	"	"	"	"	"	"	"	"	"	"	"	"	"	6	6,7	9	12,8
	250	"	"	"	"	"	"	"	"	"	"	"	"	"	"	5,8	6,3	8,3	11
FV180	125	45	42	70	100	125	13	30	20	50	8	86	49	190.000	250.000	10,5	12,4	18,9	31,3
	160	"	"	"	"	"	"	"	"	"	"	"	"	"	"	10,2	11,7	16,7	26,5
	200	"	"	"	"	"	"	"	"	"	"	"	"	"	"	9,6	10,8	14,8	25,9
	250	"	"	"	"	"	"	"	"	"	"	"	"	"	"	8,9	9,8	13	19,3
	315	"	"	"	"	"	"	"	"	"	"	"	"	"	"	8,3	9	11,6	16,6

(*) Breaking load with heat treated plates

Different options:

- Nylon, delrin, etc., rollers
- With extended pins
- In STAINLESS steel
- Surface treatments of zinc plating, nickel plating, etc.

C Series Conveyor Chains

Series C

DIN 8165 Series (Series C) Conveyor Chains with SOLID PINS

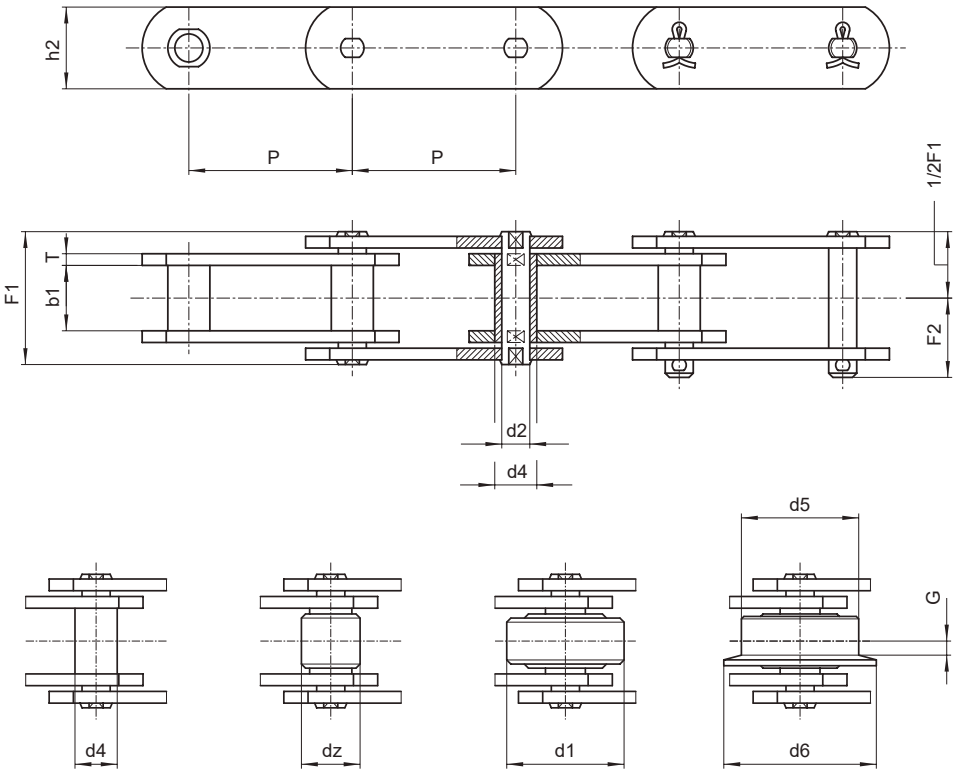

Type A Type B Type C Type D

DIN N.	P	b1	dz	d1	d5	d6	G	d4	d2	h2	T	F1	F2	Breaking load		Weight per meter kg/m			
	mm	mm	mm	mm	mm	mm	mm	mm	mm	mm	mm	mm	mm	N	N*	type A	type B	type C	type D
FV250	160	55	50	80	125	155	15	36	26	60	8	97	55	275.000	300.000	13,4	16,4	23,8	45,9
	200	"	"	"	"	"	"	"	"	"	"	"	"	"	"	12,3	14,7	20,6	38,3
	250	"	"	"	"	"	"	"	"	"	"	"	"	"	"	11,3	13,3	17,9	32,1
	315	"	"	"	"	"	"	"	"	"	"	"	"	"	"	10,5	12	15,8	27
	400	"	"	"	"	"	"	"	"	"	"	"	"	"	"	9,8	10,7	13,9	23,8
FV315	160	65	60	90	140	175	18	42	30	70	10	113	70	370.000	480.000	20,4	24,9	33,3	67,8
	200	"	"	"	"	"	"	"	"	"	"	"	"	"	"	18,5	22,1	28,9	56,4
	250	"	"	"	"	"	"	"	"	"	"	"	"	"	"	17	20	25,3	47,3
	315	"	"	"	"	"	"	"	"	"	"	"	"	"	"	15,9	18,2	22,4	39,9
	400	"	"	"	"	"	"	"	"	"	"	"	"	"	"	15	16,8	20,2	34

(*) Breaking load with heat treated plates

Different options:

- Nylon, delrin, etc., rollers
- With extended pins
- In STAINLESS steel
- Surface treatments of zinc plating, nickel plating, etc.

C Series Conveyor Chains

Series C

DIN 8165 Series (Series C) Conveyor Chains with ATTACHMENTS

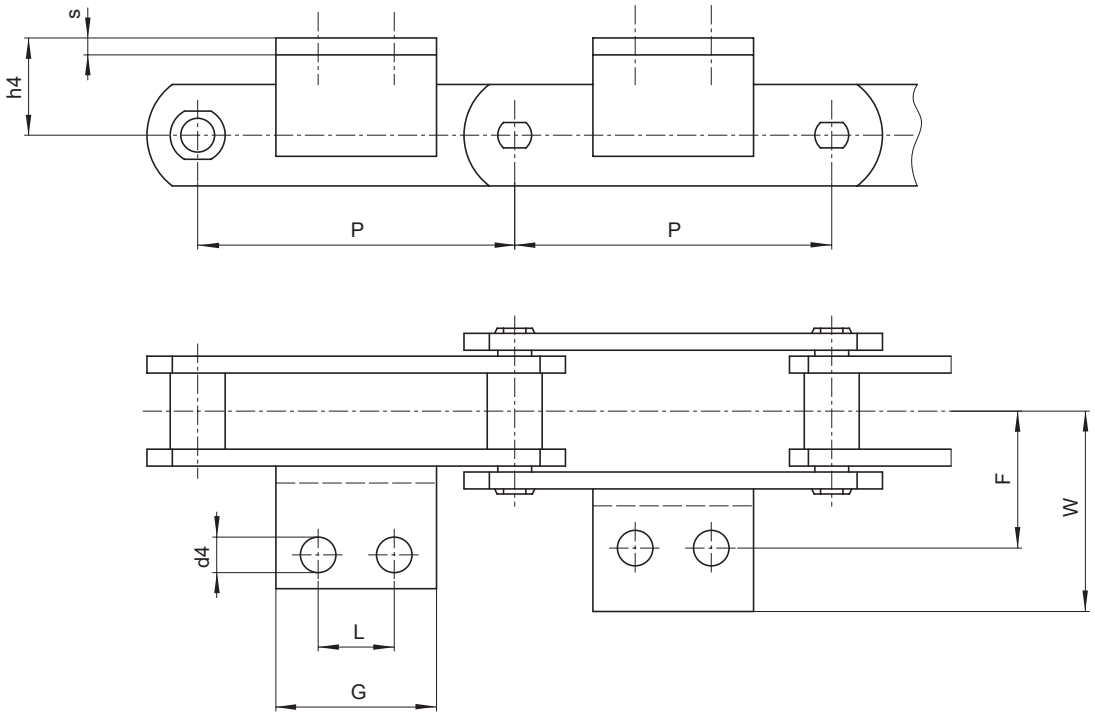

	P	h4	F	G	d4	W	L	Angle	Weight per meter Kg/m				Attachment additional weight
DIN N.	mm	mm	mm	mm	mm	mm	mm	mm	type A	type B	type C	type D	kg
FV40	50	20	25	45	6,5	64	■	♦	2,4	2,9	4	5,6	0,050
	63	"	"	31	"	40,5	■	♦	2	2,4	3,3	4,5	0,036
	80	"	"	45	"	"	25	♦25x3	1,9	2,2	3	3,9	0,05
	100	"	"	50	"	"	30	♦ "	1,7	2	2,6	3,3	0,056
	125	"	"	60	"	"	30	♦ "	1,6	1,9	2,3	3	0,067
FV63	63	30	34	40	8,4	50	■	30x4	3,8	4,5	6,4	8,9	0,063
	80	"	"	45	"	"	25	♦ "	3,2	3,8	5,3	7,2	0,095
	100	"	"	50	"	"	30	"	3	3,5	4,7	6,2	0,110
	125	"	"	60	"	"	40	"	2,7	3	4	5,3	0,140
	160	"	"	70	"	"	50	"	2,4	2,7	3,5	4,4	0,170

■ Attachment with 1 hole
♦ Integral attachments

C Series Conveyor Chains

Series C

DIN 8165 Series (Series C) Conveyor Chains with ATTACHMENTS

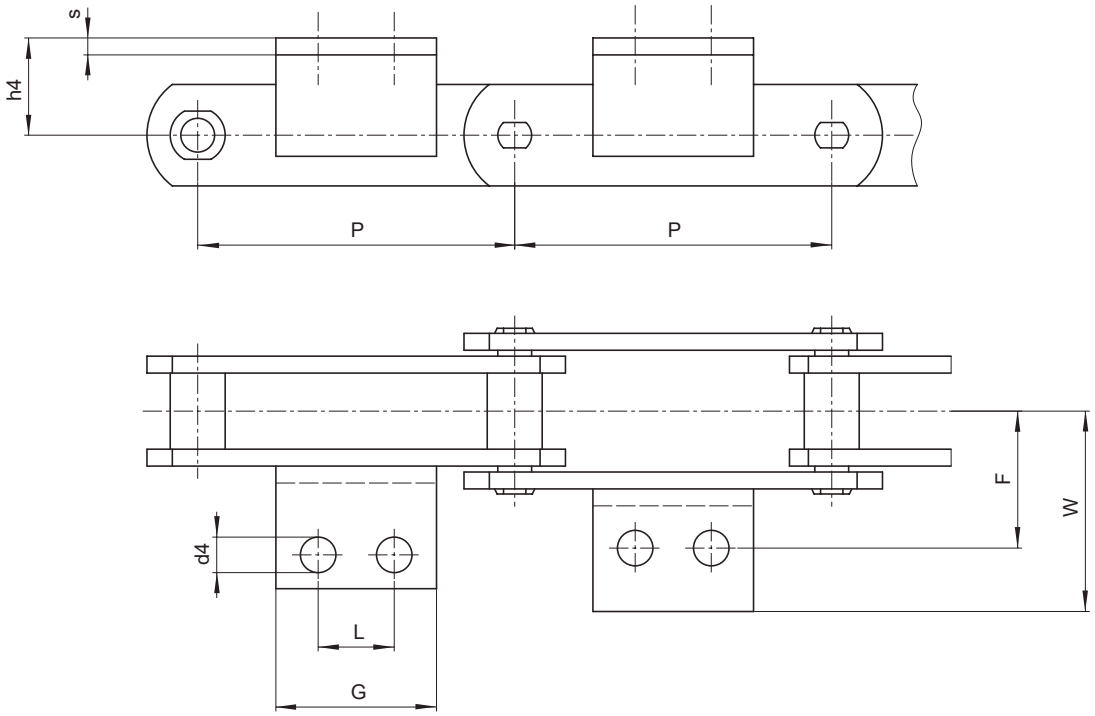

	P	h4	F	G	d4	W	L	Angle	Weight per meter Kg/m				Attachment additional weight
DIN N.	mm	mm	mm	mm	mm	mm	mm	mm	type A	type B	type C	type D	kg
FV90	63	35	40	30	8,4	64	■	♦ 40x4	5,6	6,8	10	14,7	0,072
	80	"	"	45	"	"	25	♦ "	5,1	6	8,6	12,3	0,110
	100	"	"	50	"	"	30	♦ "	4,5	5,3	7,3	10,3	0,130
	125	"	"	60	"	"	40	♦ "	4,2	4,8	6,5	8,8	0,160
	160	"	"	70	"	"	50	♦ "	4	4,5	5,8	7,6	0,20
	200	"	"	80	"	"	60	♦ "	3,5	3,8	4,8	5,8	0,240
	250	"	"	85	"	"	65	♦ "	3,4	3,7	4,6	5,4	0,210
FV112	100	40	50	50	11	70	30	40x6	6,7	7,7	11,2	18,8	0,20
	125	"	"	65	"	"	40	"	6	6,8	9,6	15,7	0,270
	160	"	"	75	"	"	50	"	5,5	6,1	8,3	13	0,310
	200	"	"	90	"	"	65	"	5,2	5,7	7,5	11,3	0,40
	250	"	"	105	"	"	80	"	4,9	5,3	6,7	9,8	0,50

■ Attachment with 1 hole
♦ Integral attachments

C Series Conveyor Chains

Series C

DIN 8165 Series (Series C) Conveyor Chains with ATTACHMENTS

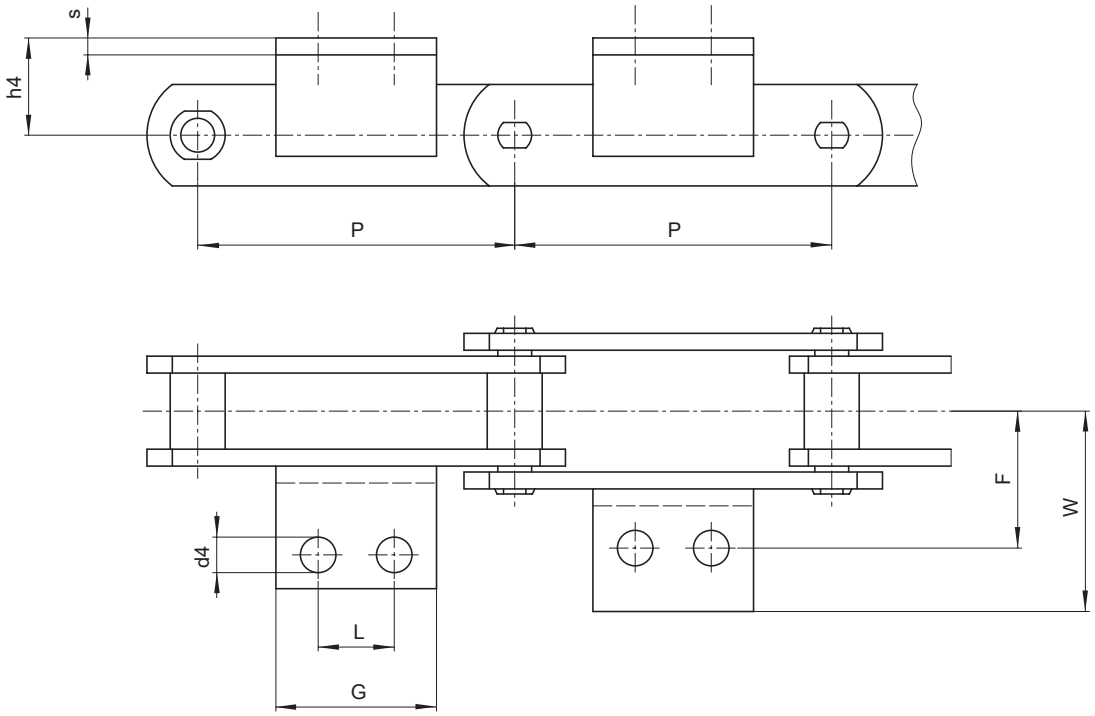

	P	h4	F	G	d4	W	L	Angle	Weight per meter Kg/m				Attachment additional weight
DIN N.	mm	mm	mm	mm	mm	mm	mm	mm	type A	type B	type C	type D	kg
FV140	100	45	50	55	11	81	30	50x6	8,2	9,5	14,3	21,4	0,230
	125	"	"	65	"	"	40	"	7,4	8,5	12,3	18	0,300
	160	"	"	75	"	"	50	"	6,7	7,5	10,5	14,9	0,360
	200	"	"	90	"	"	65	"	6	6,7	9	12,8	0,450
	250	"	"	105	"	"	80	"	5,8	6,3	8,3	11	0,540
FV180	125	45	64	63	13	91	35	50x7	10,5	12,4	18,9	31,3	0,320
	160	"	"	80	"	"	50	"	10,2	11,7	16,7	26,5	0,410
	200	"	"	95	"	"	65	"	9,6	10,8	14,8	25,9	0,520
	250	"	"	110	"	"	80	"	8,9	9,8	13	19,3	0,620
	315	"	"	130	"	"	100	"	8,3	9	11,6	16,6	0,720

C Series Conveyor Chains

Series C

DIN 8165 Series (Series C) Conveyor Chains with ATTACHMENTS

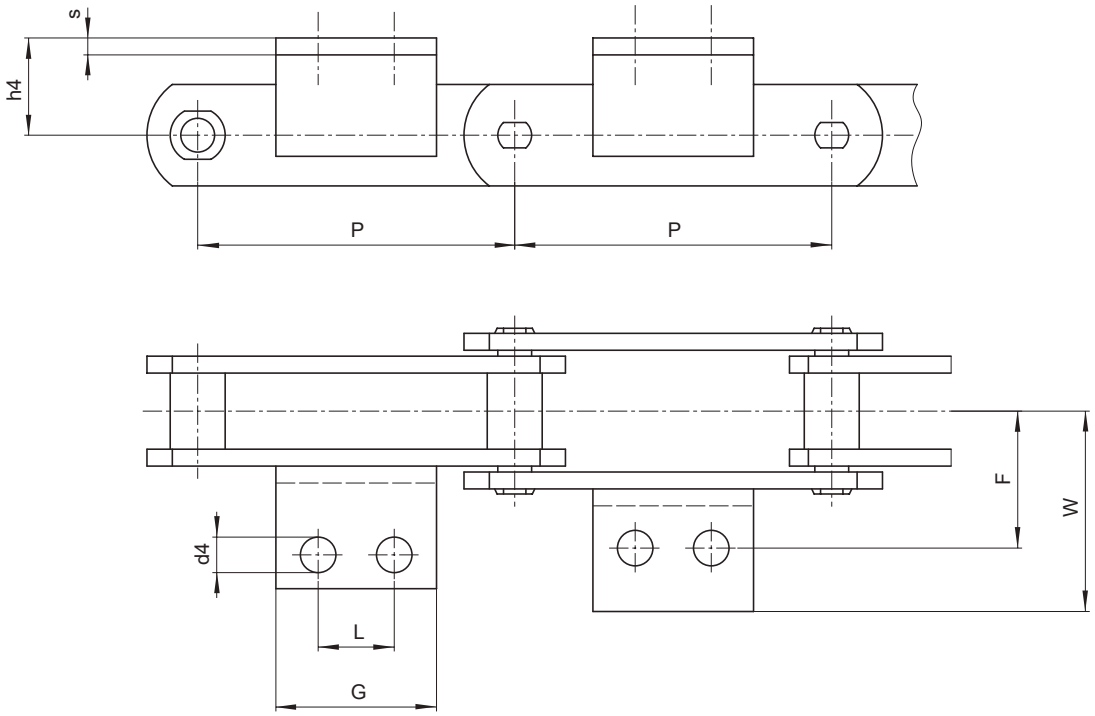

	P	h4	F	G	d4	W	L	Angle	Weight per meter Kg/m				Attachment additional weight
DIN N.	mm	mm	mm	mm	mm	mm	mm	mm	type A	type B	type C	type D	kg
FV250	160	55	69	80	14	106	50	60x8	13,4	16,4	23,8	45,9	0,570
	200	"	"	95	"	"	65	"	12,3	14,7	20,6	38,3	0,710
	250	"	"	110	"	"	80	"	11,3	13,3	17,9	32,1	0,850
	315	"	"	130	"	"	100	"	10,5	12	15,8	27	1,000
	400	"	"	130	"	"	100	"	9,8	10,7	13,9	23,8	1,000
FV315	160	60	85	50	14	130	■	70x10	20,4	24,9	33,3	67,8	0,520
	200	"	"	95	"	"	65	"	18,5	22,1	28,9	56,4	0,980
	250	"	"	110	"	"	80	"	17	20	25,3	47,3	1,130
	315	"	"	130	"	"	100	"	15,9	18,2	22,4	39,9	1,340
	400	"	"	130	"	"	100	"	15	16,8	20,2	34	1,340

■ Attachments with 1 hole

C Series Conveyor Chains

Series C

DIN 8165 Series (Series C) Conveyor Chains with HOLLOW PINS

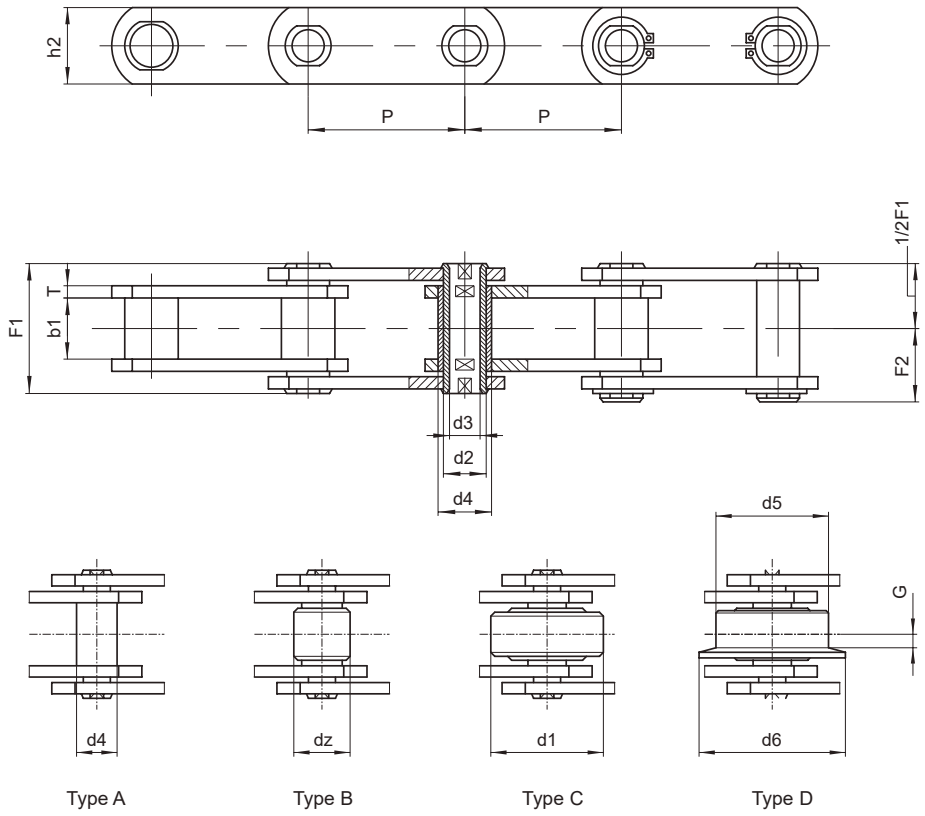

Type A | Type B | Type C | Type D

	P	b1	dz	d1	d5	d6	G	d4	d2	d3	h2	T	F1	F2	Breaking load	Weight per meter
DIN N.	mm	mm	mm	mm	mm	mm	mm	mm	mm	mm	mm	mm	mm	mm	N	Kg/ m**
FV 63	63	22	26	40	50	63	5	18	12	8	30	4	45	28	46.000	5,7
	80	"	"	"	"	"	"	"	"	"	"	"	"	"	"	4,9
	100	"	"	"	"	"	"	"	"	"	"	"	"	"	"	4,3
	125	"	"	"	"	"	"	"	"	"	"	"	"	"	"	3,8
	160	"	"	"	"	"	"	"	"	"	"	"	"	"	"	3,4
FV 90	63	25	30	48	63	78	6,5	20	14	10	35	5	53	30	73.000	9,1
	80	"	"	"	"	"	"	"	"	"	"	"	"	"	"	7,8
	100	"	"	"	"	"	"	"	"	"	"	"	"	"	"	6,8
	125	"	"	"	"	"	"	"	"	"	"	"	"	"	"	5,6
	160	"	"	"	"	"	"	"	"	"	"	"	"	"	"	5,3
	200	"	"	"	"	"	"	"	"	"	"	"	"	"	"	4,7
	250	"	"	"	"	"	"	"	"	"	"	"	"	"	"	4,3

(*) Breaking load with heat treated plates
(**) Weight for chain with roller"Type C

Different options:

- Rollers made of nylon, delrin, etc.
- Pre-tensioned and labelled
- In STAINLESS steel
- Surface treatments of zinc plating, nickel plating, etc.

C Series Conveyor Chains

Series C

DIN 8165 Series (Series C) Conveyor Chains with HOLLOW PINS

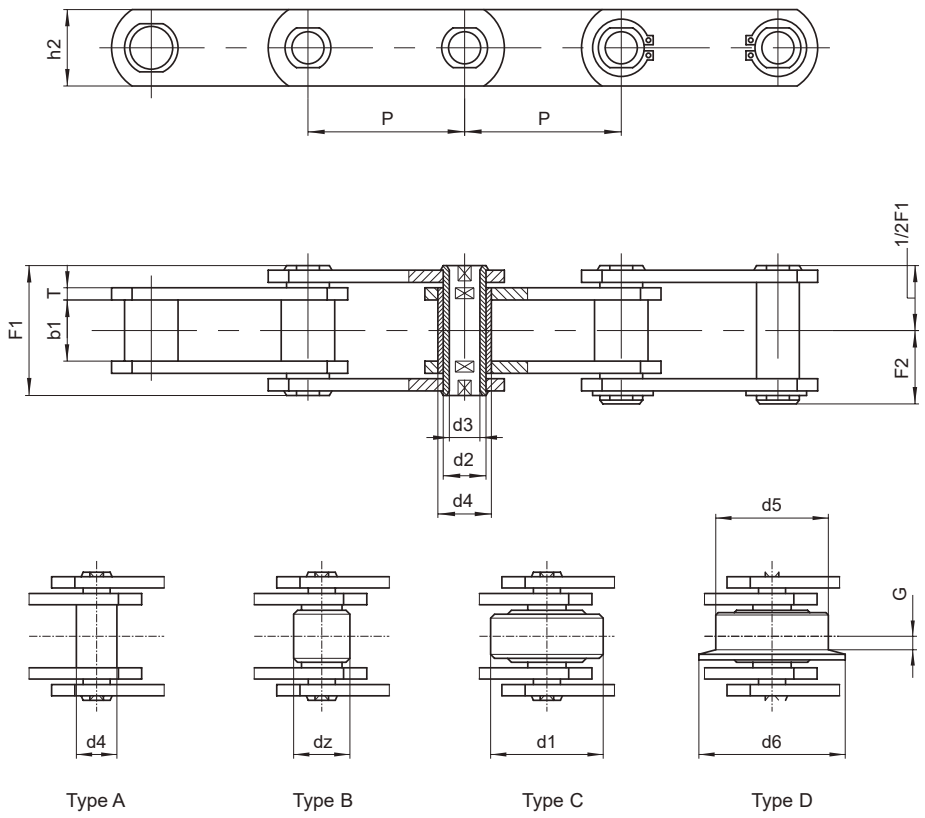

Type A Type B Type C Type D

	P	b1	dz	d1	d5	d6	G	d4	d2	d3	h2	T	F1	F2	Breaking load	Weight per meter
DIN N.	mm	mm	mm	mm	mm	mm	mm	mm	mm	mm	mm	mm	mm	mm	N	Kg/ m**
FV 112	100	30	32	55	72	90	7,5	22	16	11	40	6	62	32	90.000	10,2
	125	"	"	"	"	"	"	"	"	"	"	"	"	"	"	8,9
	160	"	"	"	"	"	"	"	"	"	"	"	"	"	"	7,8
	200	"	"	"	"	"	"	"	"	"	"	"	"	"	"	7
	250	"	"	"	"	"	"	"	"	"	"	"	"	"	"	6,3
FV 140	100	35	36	60	80	100	9	26	18	12	45	6	67	35	110.000	12,9
	125	"	"	"	"	"	"	"	"	"	"	"	"	"	"	11,2
	160	"	"	"	"	"	"	"	"	"	"	"	"	"	"	9,7
	200	"	"	"	"	"	"	"	"	"	"	"	"	"	"	8,6
	250	"	"	"	"	"	"	"	"	"	"	"	"	"	"	7,7

Different options:

- Rollers made of nylon, delrin, etc.
- Pre-tensioned and labelled
- In STAINLESS steel
- Surface treatments of zinc plating, nickel plating, etc.

(*) Breaking load with heat treated plates
(**) Weight for chain with roller"Type C

C Series Conveyor Chains

Series C

DIN 8165 Series (Series C) Conveyor Chains with HIGH PLATES

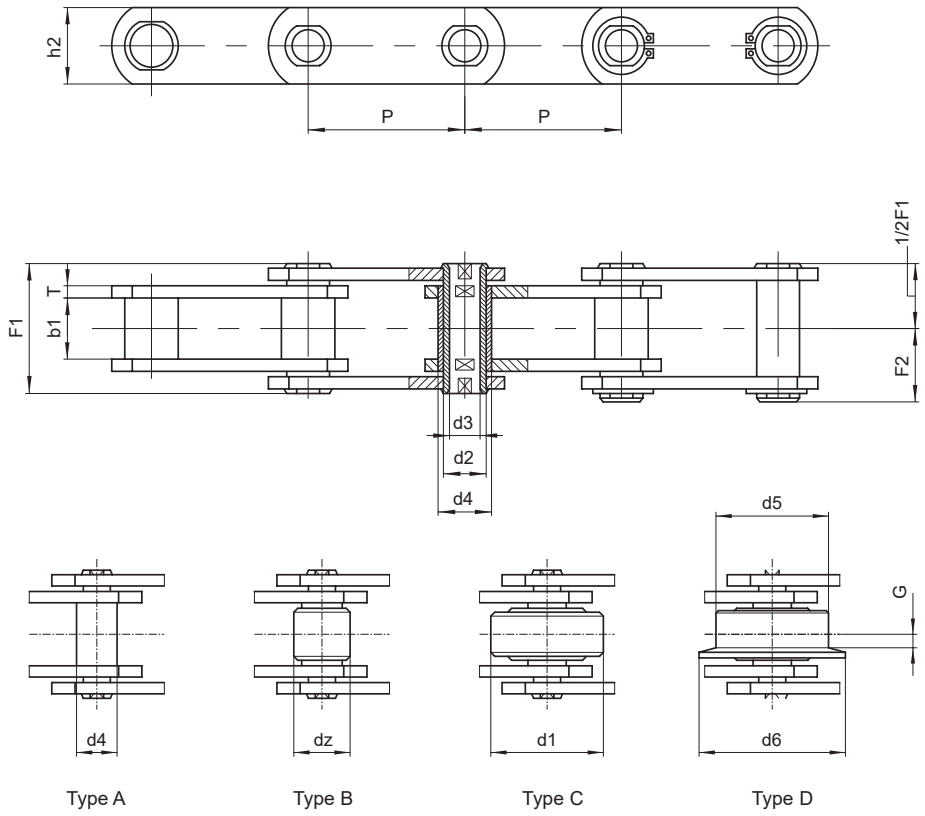

Type A | Type B | Type C | Type D

	P	b1	dz	d1	d5	d6	G	d4	d2	d3	h2	T	F1	F2	Breaking load	Weigth per meter
DIN N.	mm	mm	mm	mm	mm	mm	mm	mm	mm	mm	mm	mm	mm	mm	N	Kg/ m**
FV 180	125	45	42	70	100	125	13	30	20	14	50	8	86	45	145.000	18,2
	160	"	"	"	"	"	"	"	"	"	"	"	"	"	"	15,6
	200	"	"	"	"	"	"	"	"	"	"	"	"	"	"	13,8
	250	"	"	"	"	"	"	"	"	"	"	"	"	"	"	12,3
	315	"	"	"	"	"	"	"	"	"	"	"	"	"	"	11
FV 250	160	55	50	80	125	155	15	36	26	18	60	8	97	55	215.000	20,5
	200	"	"	"	"	"	"	"	"	"	"	"	"	"	"	18
	250	"	"	"	"	"	"	"	"	"	"	"	"	"	"	15,9
	315	"	"	"	"	"	"	"	"	"	"	"	"	"	"	14,2
FV 315	160	65	60	90	140	175	18	42	30	20	70	10	117	63	295.000	34,1
	200	"	"	"	"	"	"	"	"	"	"	"	"	"	"	29,5
	250	"	"	"	"	"	"	"	"	"	"	"	"	"	"	25,8
	315	"	"	"	"	"	"	"	"	"	"	"	"	"	"	22,8
	400	"	"	"	"	"	"	"	"	"	"	"	"	"	"	20,2

(*) Breaking load with heat treated plates
(**) Weight for chain with roller"Type C

Different options:

- Rollers made of nylon, delrin, etc.
- Pre-tensioned and labelled
- In STAINLESS steel
- Surface treatments of zinc plating, nickel plating, etc.

C Series Conveyor Chains

Series C

DIN 8165 Series (Series C) Conveyor Chains with HIGH PLATES

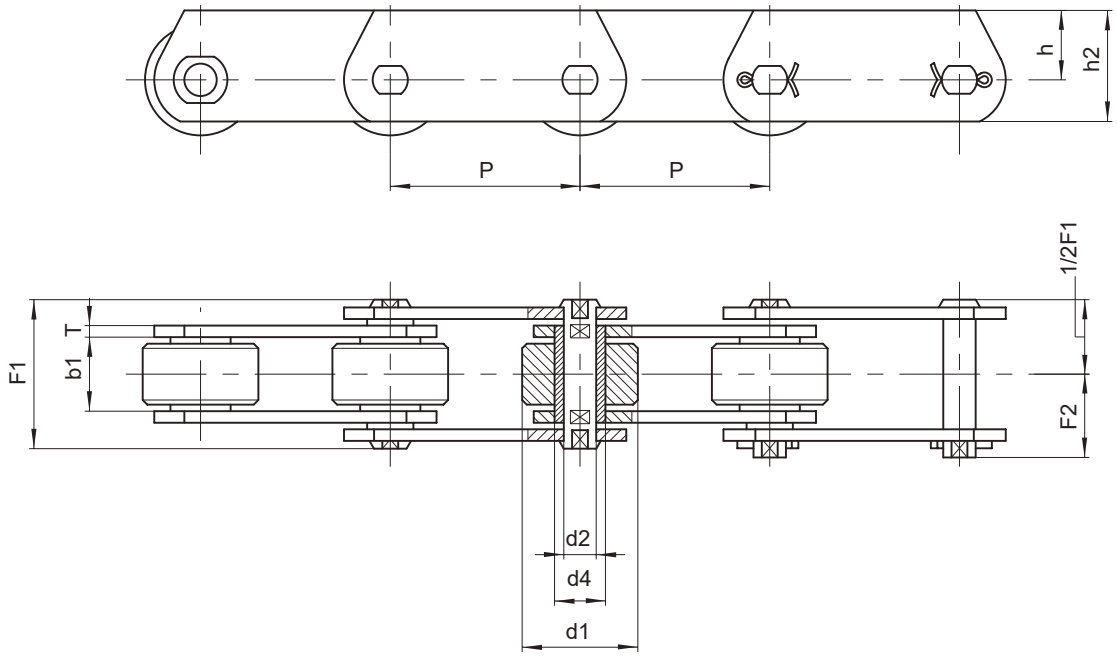

	P	b1	d1	d4	d2	h2	h	T	F1	F2	Breaking load		Weight per meter
DIN N.	mm	mm	mm	mm	mm	mm	mm	mm	mm	mm	N	N*	kg/m
FVT40	50	18	32	15	10	35	22,5	3	36	21	42.000	47.000	5
	63	"	"	"	"	"	"	"	"	"	"	"	4,3
	80	"	"	"	"	"	"	"	"	"	"	"	3,8
	100	"	"	"	"	"	"	"	"	"	"	"	3,4
	125	"	"	"	"	"	"	"	"	"	"	"	3
FVT63	63	22	40	18	12	40	25	4	45	26	64.000	75.000	7,5
	80	"	"	"	"	"	"	"	"	"	"	"	6,5
	100	"	"	"	"	"	"	"	"	"	"	"	5,7
	125	"	"	"	"	"	"	"	"	"	"	"	5,1
	160	"	"	"	"	"	"	"	"	"	"	"	4,5

Different options:

- Rollers made of nylon, delrin, etc.
- Pre-tensioned and labelled
- In STAINLESS steel
- Surface treatments of zinc plating, nickel plating, etc

(*) Breaking load with heat treated plates

C Series Conveyor Chains

Series C

DIN 8165 Series (Series C) Conveyor Chains with HIGH PLATES

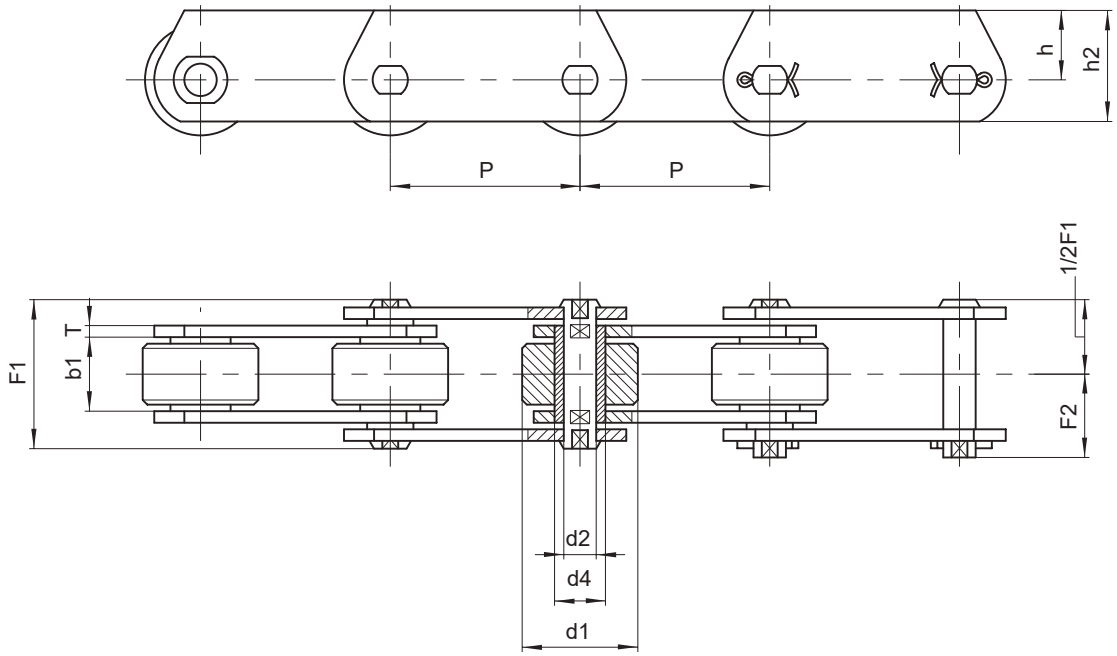

	P	b1	d1	d4	d2	h2	h	T	F1	F2	Breaking load		Weight per meter
DIN N.	mm	mm	mm	mm	mm	mm	mm	mm	mm	mm	N	N*	kg/m
FVT90	63	25	48	20	14	45	27,5	5	53	30	100.000	115.000	11,7
	80	"	"	"	"	"	"	"	"	"	"	"	10
	100	"	"	"	"	"	"	"	"	"	"	"	8,7
	125	"	"	"	"	"	"	"	"	"	"	"	7,7
	160	"	"	"	"	"	"	"	"	"	"	"	6,8
	200	"	"	"	"	"	"	"	"	"	"	"	5,8
	250	"	"	"	"	"	"	"	"	"	"	"	5,4
FVT112	100	30	55	22	16	50	30	6	62	35	120.000	170.000	12,7
	125	"	"	"	"	"	"	"	"	"	"	"	11,7
	160	"	"	"	"	"	"	"	"	"	"	"	9,7
	200	"	"	"	"	"	"	"	"	"	"	"	8,7
	250	"	"	"	"	"	"	"	"	"	"	"	8

(*) Breaking load with heat treated plates

Different options:

- Rollers made of nylon, delrin, etc.
- Pre-tensioned and labelled
- In STAINLESS steel
- Surface treatments of zinc plating, nickel plating, etc

C Series Conveyor Chains

Series C

DIN 8165 Series (Series C) Conveyor Chains with HIGH PLATES

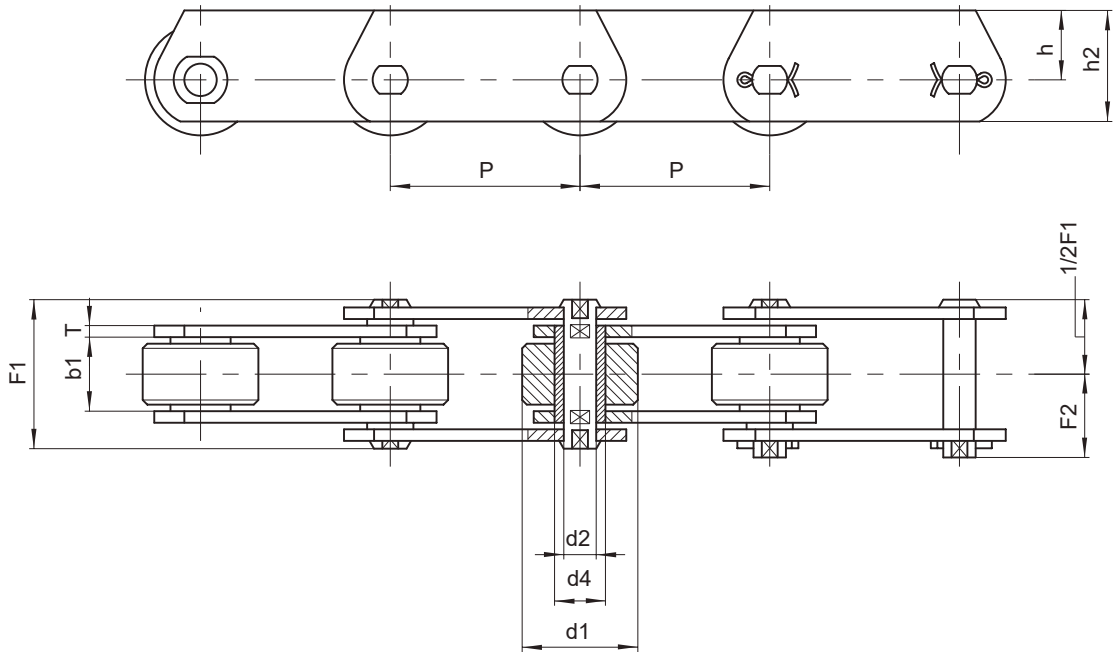

	P	b1	d1	d4	d2	h2	h	T	F1	F2	Breaking load		Weight per meter
DIN N.	mm	mm	mm	mm	mm	mm	mm	mm	mm	mm	N	N*	kg/m
FVT140	100	35	60	25	18	60	37,5	6	67	38	145.000	180.000	16,8
	125	"	"	"	"	"	"	"	"	"	"	"	14,6
	160	"	"	"	"	"	"	"	"	"	"	"	12,6
	200	"	"	"	"	"	"	"	"	"	"	"	11,3
	250	"	"	"	"	"	"	"	"	"	"	"	10,1
FVT180	125	45	70	30	20	70	45	8	86	49	190.000	250.000	24,2
	160	"	"	"	"	"	"	"	"	"	"	"	20,8
	200	"	"	"	"	"	"	"	"	"	"	"	18,4
	250	"	"	"	"	"	"	"	"	"	"	"	16,5
	315	"	"	"	"	"	"	"	"	"	"	"	14,9

Different options:

- Rollers made of nylon, Delrin, etc.
- Pre-tensioned and labelled
- In STAINLESS steel
- Surface treatments of zinc plating, nickel plating, etc

(*) Breaking load with heat treated plates

C Series Conveyor Chains

Series C

DIN 8165 Series (Series C) Conveyor Chains with HIGH PLATES

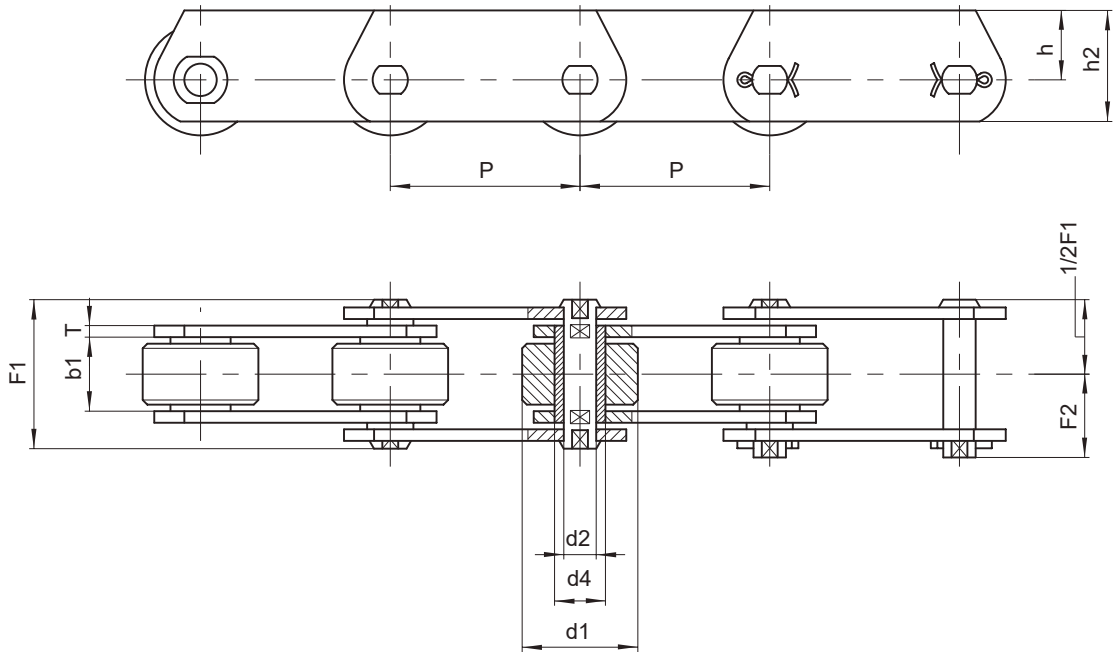

	P	b1	d1	d4	d2	h2	h	T	F1	F2	Breaking load		Weigth per meter
DIN N.	mm	mm	mm	mm	mm	mm	mm	mm	mm	mm	N	N*	kg/m
FVT250	160	55	80	36	26	80	50	8	97	55	275.000	300.000	28,2
	200	"	"	"	"	"	"	"	"	"	"	"	24,5
	250	"	"	"	"	"	"	"	"	"	"	"	21,7
	315	"	"	"	"	"	"	"	"	"	"	"	19,3
FVT315	160	65	90	42	30	90	55	10	26		370.000	480.000	39,9
	200	"	"	"	"	"	"	"	"	"	"	"	34,8
	250	"	"	"	"	"	"	"	"	"	"	"	30,6
	315	"	"	"	"	"	"	"	"	"	"	"	27,3
	400	"	"	"	"	"	"	"	"	"	"	"	24,5

(*) Breaking load with heat treated plates

Different options:

- Rollers made of nylon, Delrin, etc.
- Pre-tensioned and labelled
- In STAINLESS steel
- Surface treatments of zinc plating, nickel plating, etc

IRIS chains

www.iris-chains.com

SINCE 1935

Polígono Ind. Erisono nº 1
20600 Eibar (Guipuzcoa) España

T +34 943 120 550
iris@iris-chains.com