IRIS chains

Standard Roller Chains

IRIS standard roller chains are designed and manufactured to cover and surpass ISO, DIN, ANSI and BS standards.

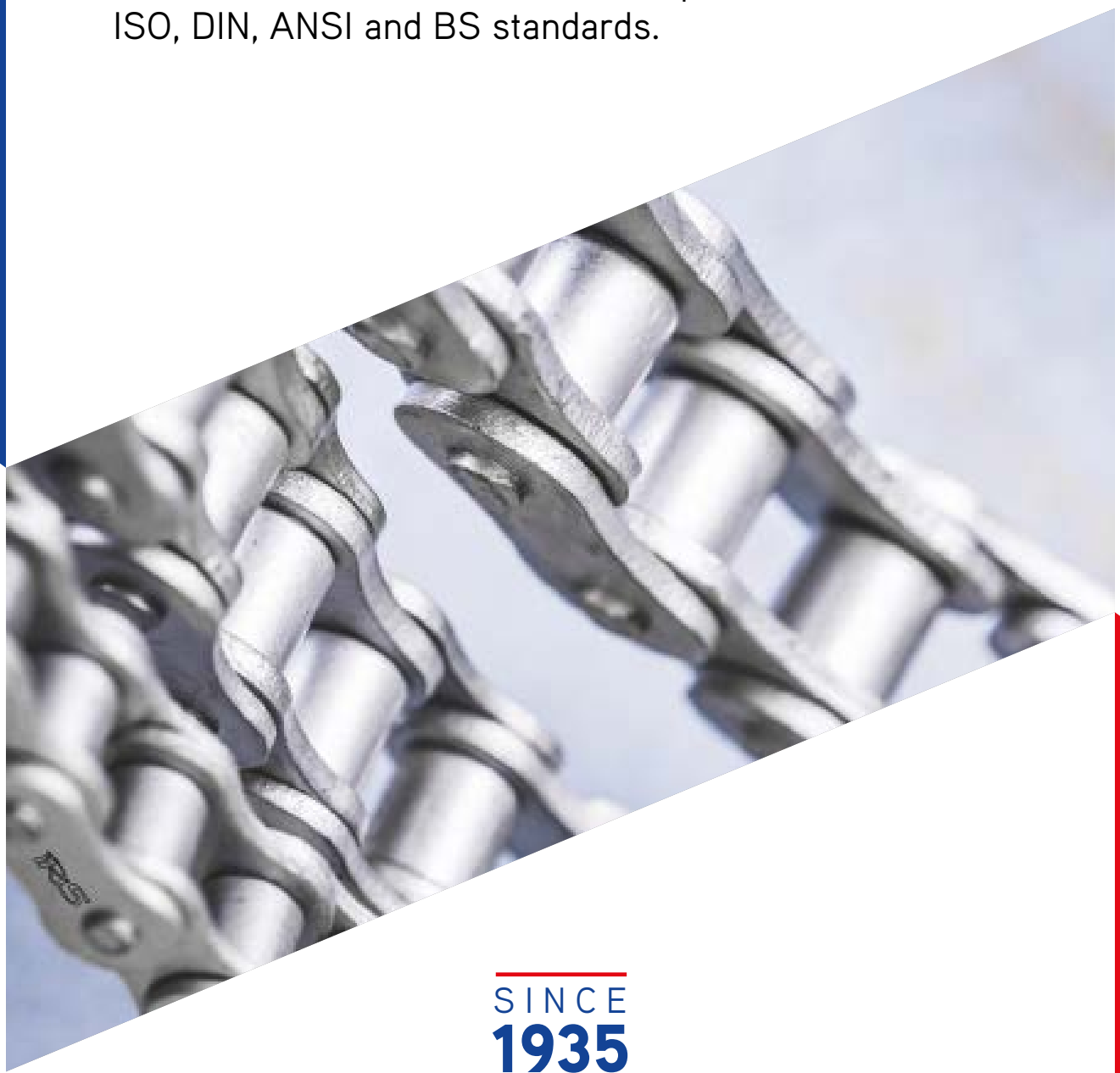

SINCE 1935

Standard Roller Chains

IRIS Standard precision roller chains are designed and manufactured to cover and surpass ISO, DIN, ANSI and BS requirements. Commonly found in a variety of industrial drive systems, IRIS chains are engineered and built for high performance even in the toughest applications, ensuring a long service life.

IRIS conveyor chains offer the user the benefits of parallel and synchronous running, extremely precise positioning, quiet running and a significantly higher breaking resistance than the norm. As a result, downtime is minimized and there is a significant reduction of operating costs.

Our standard lubrication ensures resistance to a temperature range from -5º C to +120º C: a distinct lube can be applied at request for applications with temperatures of down to -30 ºC to 250 ºC.





HIGHLIGHTS

- All IRIS Standard roller chains cover and surpass the requirements of ISO 606.
- Initial stretching contributes to a higher fatigue strength.
- All components are heat-treated according to their size and application.
- Shot peening is applied to precision plates for higher resistance.
- Pins' surface is smooth and wear-resistant.
- Bushes are perfectly cylindrical.
- Special initial lubricant is applied to increase resistance.

Iris Chains options

With a wide knowledge of the European market demand, all of our main products are available in stock both for British Standards and those by ANSI.

From transmission chains to chains with attachments for transport applications, and from corrosion-resistant versions to lube-free solutions, IRIS cover the most severe clients requirements, and has a wide range of products for each application.



CHAIN STRUCTURE AND CONNECTING LINKS

IRIS Standard roller chains are able to transmit mechanical power in a highly efficient and adjustable way for a great variety of industrial applications. The illustration above shows in detail the structure and its parts, as well as the connecting links that held the components.

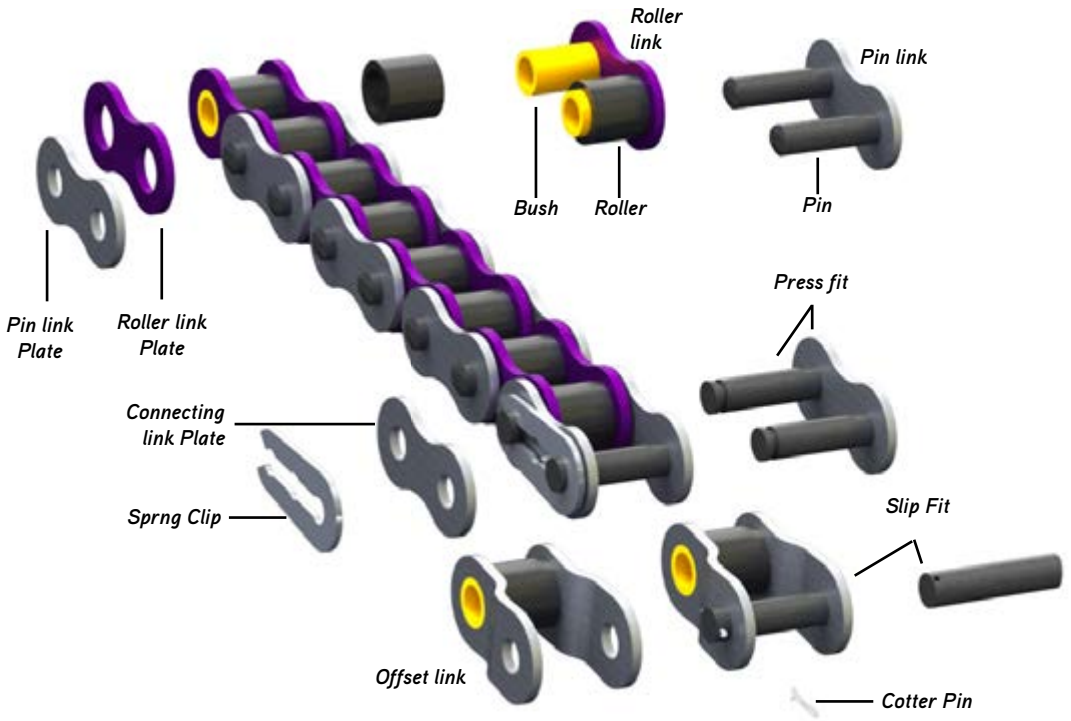

INDUSTRIES

- ✓ Industrial handling
- ✓ End of line food packaging machinery
- ✓ Pharmaceutical sector
- ✓ Confectionery production plants
- ✓ Pasta production and bakery machinery
- ✓ Painting systems
- ✓ Wood industry machinery
- ✓ Ceramic systems
- ✓ Many more industrial applications

SERVICES

Many references **available in stock.**

Specific product on request.

Matched pairs on request for chains working in parallel.

Chains of any length.

Technical assistance.

Initial treatment with standard lubrication for higher resistance.

Special lube at request for extreme temperature conditions.





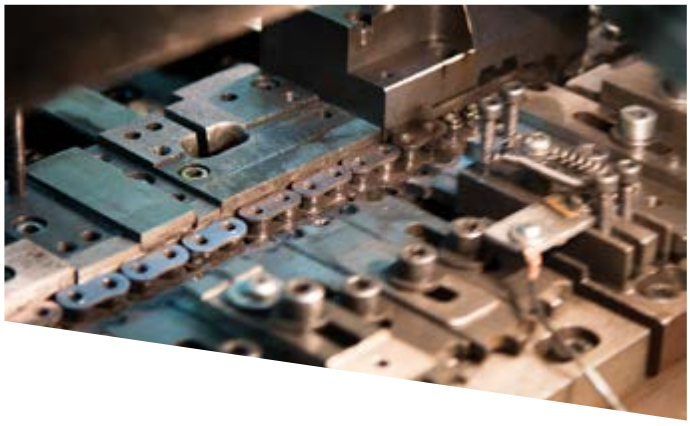

ISO Series DIN ISO 606 (DIN 8187)

Simplex

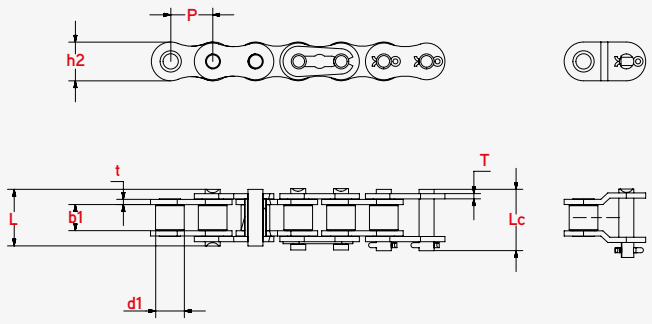

Duplex

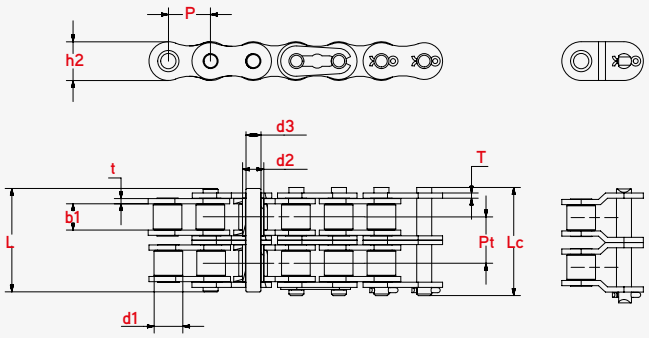

		Pitch	Roller diameter	Width between Plates	Pin diameter	Pin lenght		Inner Plate height	Traverse pitch Plate thickness	Minimun Tensile Strenght	Weight per meter
DIN/ISO No.	Material	P mm	d1 max mm	b1 min mm	d2 max mm	L max mm	Lc max mm	h2 max mm	t/T max mm	Q min KN	q kg/m
Simplex											
04B-1	CS, NP, DT, SS	6,000	4,00	2,80	1,85	6,80	7,80	5,00	0,60	3,00	0,11
05B-1	CS, NP, DT, SS	8,000	5,00	3,00	2,31	8,20	8,90	7,10	0,80	5,00	0,20
*06B-1	CS, NP, DT, SS	9,525	6,35	5,72	3,28	13,15	14,10	8,20	1,30	9,00	0,41
08B-1	CS, NP, DT, SS	12,700	8,51	7,75	4,45	16,70	18,20	11,80	1,60	18,00	0,69
10B-1	CS, NP, DT, SS	15,875	10,16	9,65	5,08	19,50	20,90	14,70	1,70	22,40	0,93
12B-1	CS, NP, DT, SS	19,050	12,07	11,68	5,72	22,50	24,20	16,00	1,85	29,00	1,15
16B-1	CS, NP, DT, SS	25,400	15,88	17,02	8,28	36,10	37,40	21,00	4,15/3,1	60,00	2,71
20B-1	CS, NP, DT, SS	31,750	19,05	19,56	10,19	41,30	45,00	26,40	4,5/3,5	95,00	3,70
24B-1	CS, DT, SS	38,100	25,40	25,40	14,63	53,40	57,80	33,20	6,0/4,8	160,00	7,10
28B-1	CS, DT, SS	44,450	27,94	30,99	15,90	65,10	69,50	36,70	7,5/6,0	200,00	8,50
32B-1	CS, SS	50,800	29,21	30,99	17,81	66,00	71,00	42,00	7,0/6,0	250,00	10,25
40B-1	CS, SS	63,500	39,37	38,10	22,89	82,20	89,20	52,96	8,5/8,0	355,00	16,35
48B-1	CS, SS	76,200	48,26	45,72	29,24	99,10	107,00	63,80	12,0/10,0	560,00	25,00
Duplex											
05B-2	CS, NP, DT, SS	8,000	5,00	3,00	2,31	13,90	14,50	7,10	0,80	7,80	0,33
*06B-2	CS, NP, DT, SS	9,525	6,35	5,72	3,28	23,40	24,40	8,20	1,30	16,90	0,77
08B-2	CS, NP, DT, SS	12,700	8,51	7,75	4,45	31,00	32,20	11,80	1,60	32,00	1,34
10B-2	CS, NP, DT, SS	15,875	10,16	9,65	5,08	36,10	37,50	14,70	1,70	44,50	1,84
12B-2	CS, NP, DT, SS	19,050	12,07	11,68	5,72	42,00	43,60	16,00	1,85	57,80	2,31
16B-2	CS, NP, DT, SS	25,400	15,88	17,02	8,28	68,00	69,30	21,00	4,15/3,1	106,00	5,42
20B-2	CS, NP, DT, SS	31,750	19,05	19,56	10,19	77,80	81,50	26,40	4,5/3,5	170,00	7,20
24B-2	CS, DT, SS	38,100	25,40	25,40	14,63	101,70	106,20	33,20	6,0/4,8	280,00	13,40
28B-2	CS, DT, SS	44,450	27,94	30,99	15,90	124,60	129,10	36,70	7,5/6,0	360,00	16,60
32B-2	CS, SS	50,800	29,21	30,99	17,81	124,60	129,60	42,00	7,0/6,0	450,00	21,00
40B-2	CS, SS	63,500	39,37	38,10	22,89	154,50	161,50	52,96	8,5/8,0	630,00	32,00
48B-2	CS, SS	76,200	48,26	45,72	29,24	190,40	198,20	63,80	12,0/10,0	1.000,00	50,00

*** Straight plate**

CS CARBON STEEL
DT DELTA-TONE
NP NICKELLED PLATED
SS STAINLESS STEEL

ISO Series DIN ISO 606 (DIN 8187)

Triplex

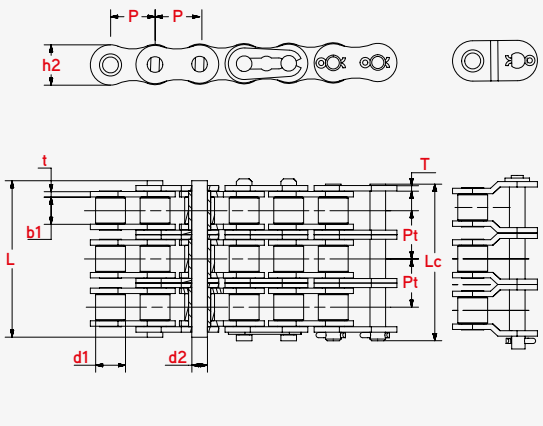

Quadruplex

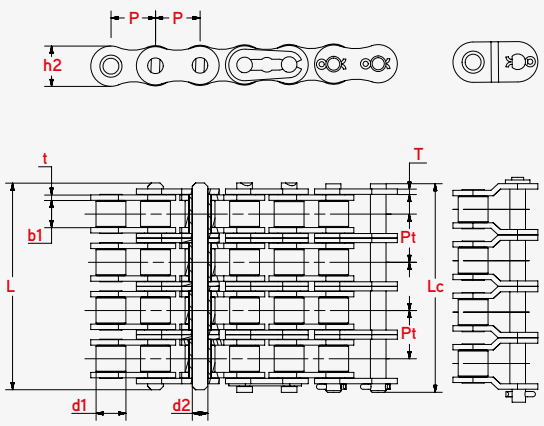

		Pitch	Roller diameter	Width between Plates	Pin diameter	Pin lenght		Inner Plate height	Traverse pitch Plate thickness	Minimun Tensile Strenght	Weight per meter
DIN/ISO No.	Material	P mm	d1 max mm	b1 min mm	d2 max mm	L max mm	Lc max mm	h2 max mm	t/T max mm	Q min KN	q kg/m
Triplex											
05B-3	CS, NP, DT, SS	8,000	5,00	3,00	2,31	19,50	20,20	7,10	0,80	11,10	0,48
*06B-3	CS, NP, DT, SS	9,525	6,35	5,72	3,28	33,50	34,60	8,20	1,30	24,90	1,16
08B-3	CS, NP, DT, SS	12,700	8,51	7,75	4,45	45,10	46,10	11,80	1,60	47,50	2,03
10B-3	CS, NP, DT, SS	15,875	10,16	9,65	5,08	52,70	54,10	14,70	1,70	66,70	2,77
12B-3	CS, NP, DT, SS	19,050	12,07	11,68	5,72	61,50	63,10	16,00	1,85	86,70	3,46
16B-3	CS, NP, DT, SS	25,400	15,88	17,02	8,28	99,80	101,20	21,00	4,15/3,1	160,00	8,13
20B-3	CS, NP, DT, SS	31,750	19,05	19,56	10,19	114,20	117,90	26,40	4,5/3,5	250,00	10,82
24B-3	CS, DT, SS	38,100	25,40	25,40	14,63	150,10	154,60	33,20	6,0/4,8	425,00	20,10
28B-3	CS, DT, SS	44,450	27,94	30,99	15,90	184,20	188,70	36,70	7,5/6,0	530,00	24,92
32B-3	CS, SS	50,800	29,21	30,99	17,81	183,20	188,20	42,00	7,0/6,0	670,00	31,56
40B-3	CS, SS	63,500	39,37	38,10	22,89	226,80	233,80	52,96	8,5/8,0	950,00	48,10
48B-3	CS, SS	76,200	48,26	45,72	29,24	281,60	289,40	63,80	12,0/10,0	1.500,00	75,00
Quadruplex											
08B-4	CS, NP, DT, SS	12,700	8,51	7,75	4,45	58,30	66,10	11,80	1,60	65,85	2,72
10B-4	CS, NP, DT, SS	15,875	10,16	9,65	5,08	68,80	77,00	14,70	1,70	88,00	3,47
12B-4	CS, NP, DT, SS	19,050	12,07	11,68	5,72	81,00	99,20	16,00	1,85	115,80	4,78
16B-4	CS, NP, DT, SS	25,400	15,88	17,02	8,28	132,00	142,80	21,00	4,15/3,1	222,00	10,39
20B-4	CS, NP, DT, SS	31,750	19,05	19,56	10,19	150,70	154,30	26,40	4,5/3,5	330,00	14,44

*** Straight plate**

CS CARBON STEEL
DT DELTA-TONE
NP NICKELLED PLATED
SS STAINLESS STEEL



ASA Series DIN ISO 606 (DIN 8188)

Simplex

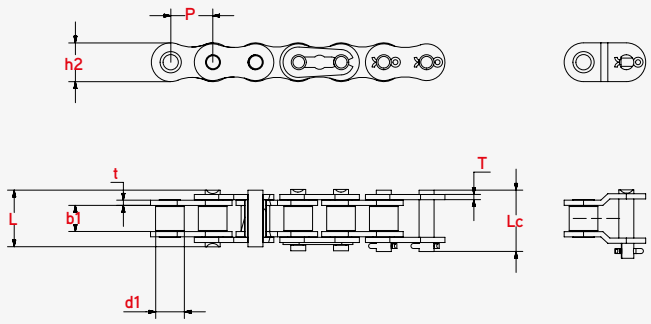

Duplex

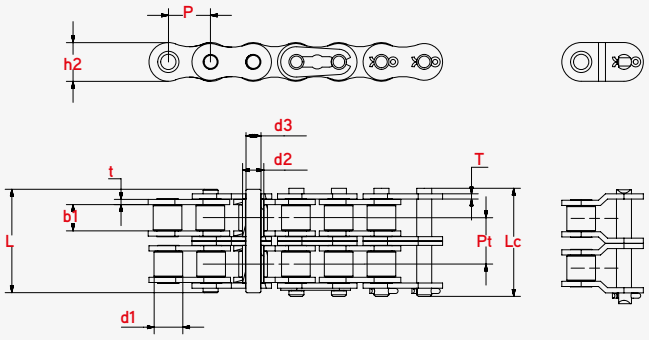

			Pitch	Roller diameter	Width between Plates	Pin diameter	Pin lenght		Inner Plate height	Traverse pitch Plate thickness	Minimun Tensile Strenght	Weight per meter
DIN/ISO No.	ANSI No.	Material	P mm	d1 max mm	b1 min mm	d2 max mm	L max mm	Lc max mm	h2 max mm	t/T max mm	Q min KN	q kg/m
Simplex												
*04A-1	*25	CS, DT, SS	6,350	3,30	3,18	2,31	7,90	8,40	6,00	0,80	3,50	0,15
*06A-1	*35	CS, DT, SS	9,525	5,08	4,77	3,58	12,40	13,17	9,00	1,30	7,90	0,33
08A-1	40	CS, DT, SS	12,700	7,95	7,85	3,96	16,60	17,80	12,00	1,50	14,10	0,62
10A-1	50	CS, DT, SS	15,875	10,16	9,40	5,08	20,70	22,20	15,09	2,03	22,20	1,02
12A-1	60	CS, DT, SS	19,050	11,91	12,57	5,94	25,90	27,70	18,00	2,42	31,80	1,50
16A-1	80	CS, DT, SS	25,400	15,88	15,75	7,92	32,70	35,00	24,00	3,25	56,70	2,60
20A-1	100	CS, DT, SS	31,750	19,05	18,90	9,53	40,40	44,70	30,00	4,00	88,50	3,91
24A-1	120	CS, DT, SS	38,100	22,23	25,22	11,10	50,30	54,30	35,70	4,80	127,00	5,62
28A-1	140	CS, SS	44,450	25,40	25,22	12,70	54,40	59,00	41,00	5,60	172,40	7,50
32A-1	160	CS, SS	50,800	28,58	31,55	14,27	64,80	69,60	47,80	6,40	226,80	10,10
36A-1	180	CS, SS	57,150	35,71	35,48	17,46	72,80	78,60	53,60	7,20	280,20	13,45
40A-1	200	CS, SS	63,500	39,68	37,85	19,85	80,30	87,20	60,00	8,00	353,80	16,15
48A-1	240	CS, SS	76,200	47,63	47,35	23,81	95,50	103,00	72,39	9,50	510,30	23,20
Duplex												
*04A-2	*25-2	CS, DT, SS	6,350	3,30	3,18	2,31	14,50	15,00	6,00	0,80	7,00	0,28
*06A-2	*35-2	CS, DT, SS	9,525	5,08	4,77	3,58	22,50	23,30	9,00	1,30	15,80	0,63
08A-2	40-2	CS, DT, SS	12,700	7,95	7,85	3,96	31,00	32,20	12,00	1,50	28,20	1,12
10A-2	50-2	CS, DT, SS	15,875	10,16	9,40	5,08	38,90	40,40	15,09	2,03	44,40	2,00
12A-2	60-2	CS, DT, SS	19,050	11,91	12,57	5,94	48,80	50,50	18,00	2,42	63,60	2,92
16A-2	80-2	CS, DT, SS	25,400	15,88	15,75	7,92	62,70	64,30	24,00	3,25	113,40	5,15
20A-2	100-2	CS, DT, SS	31,750	19,05	18,90	9,53	76,40	80,50	30,00	4,00	177,00	7,80
24A-2	120-2	CS, DT, SS	38,100	22,23	25,22	11,10	95,80	99,70	35,70	4,80	254,00	11,70
28A-2	140-2	CS, SS	44,450	25,40	25,22	12,70	103,30	107,90	41,00	5,60	344,80	15,14
32A-2	160-2	CS, SS	50,800	28,58	31,55	14,27	123,30	128,10	47,80	6,40	453,60	20,14
36A-2	180-2	CS, SS	57,150	35,71	35,48	17,46	138,60	144,40	53,60	7,20	560,50	29,22
40A-2	200-2	CS, SS	63,500	39,68	37,85	19,85	151,90	158,80	60,00	8,00	707,60	32,24
48A-2	240-2	CS, SS	76,200	47,63	47,35	23,81	183,40	190,80	72,39	9,50	1.020,60	45,23

*** d1 indicates the external diameter of the bushing.**

CS CARBON STEEL
DT DELTA-TONE
NP NICKELLED PLATED
SS STAINLESS STEEL

ASA Series DIN ISO 606 (DIN 8188)

Triplex

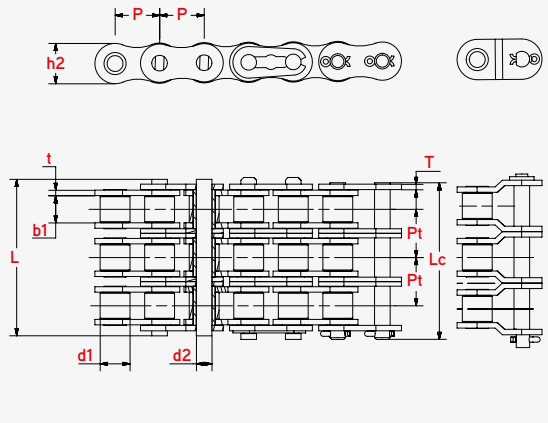

Quadruplex

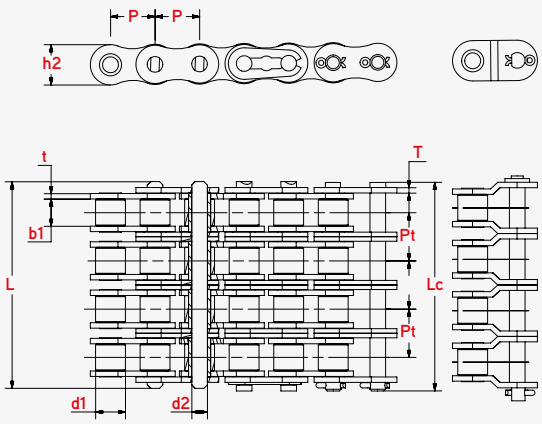

			Pitch	Roller diameter	Width between Plates	Pin diameter	Pin lenght		Inner Plate height	Traverse pitch Plate thickness	Minimun Tensile Strenght	Weight per meter
DIN/ISO No.	ANSI No.	Material	P mm	d1 max mm	b1 min mm	d2 max mm	L max mm	Lc max mm	h2 max mm	t/T max mm	Q min KN	q kg/m
Triplex												
*04A-3	*25-3	CS, DT, SS	6,350	3,30	3,18	2,31	21,00	21,50	6,00	0,80	10,50	0,44
*06A-3	*35-3	CS, DT, SS	9,525	5,08	4,77	3,58	32,70	33,50	9,00	1,30	23,70	1,05
08A-3	40-3	CS, DT, SS	12,700	7,95	7,85	3,96	45,40	46,60	12,00	1,50	42,30	1,90
10A-3	50-3	CS, DT, SS	15,875	10,16	9,40	5,08	57,00	58,50	15,09	2,03	66,60	3,09
12A-3	60-3	CS, DT, SS	19,050	11,91	12,57	5,94	71,50	73,30	18,00	2,42	95,40	4,54
16A-3	80-3	CS, DT, SS	25,400	15,88	15,75	7,92	91,70	93,60	24,00	3,25	170,10	7,89
20A-3	100-3	CS, DT, SS	31,750	19,05	18,90	9,53	112,20	116,30	30,00	4,00	265,50	11,77
24A-3	120-3	CS, DT, SS	38,100	22,23	25,22	11,10	141,40	145,20	35,70	4,80	381,00	17,53
28A-3	140-3	CS, SS	44,450	25,40	25,22	12,70	152,20	156,80	41,00	5,60	517,20	22,20
32A-3	160-3	CS, SS	50,800	28,58	31,55	14,27	181,80	186,60	47,80	6,40	680,40	30,02
36A-3	180-3	CS, SS	57,150	35,71	35,48	17,46	204,40	210,20	53,60	7,20	840,70	38,22
40A-3	200-3	CS, SS	63,500	39,68	37,85	19,85	223,50	230,40	60,00	8,00	1.061,40	49,03
48A-3	240-3	CS, SS	76,200	47,63	47,35	23,81	271,30	278,60	72,39	9,50	1.530,90	71,60
Quadruplex												
08A-4	40-4	CS, DT, SS	12,700	7,95	7,85	3,96	59,70	61,00	12,00	1,50	55,20	2,57
10A-4	50-4	CS, DT, SS	15,875	10,16	9,40	5,08	75,10	76,60	15,09	2,03	87,20	4,30
12A-4	60-4	CS, DT, SS	19,050	11,91	12,57	5,94	94,50	96,10	18,00	2,42	127,20	6,21
16A-4	80-4	CS, DT, SS	25,400	15,88	15,75	7,92	121,00	124,40	24,00	3,25	222,40	10,37
20A-4	100-4	CS, DT, SS	31,750	19,05	18,90	9,53	147,8	152,10	30,00	4,00	389,40	15,60

*** d1 indicates the external diameter of the bushing.**

CS CARBON STEEL
DT DELTA-TONE
NP NICKELLED PLATED
SS STAINLESS STEEL

ISO AND ASA HEAVY SERIE DIN ISO 606 (DIN 8187/8188)

IRIS offers ASA-standard roller chain series to meet a variety of load-driving requirements.

ISO and ASA Standard
With thicker plates and shot peening for higher resistance.

ISO and ASA Heavy Series
Provides outstanding resistance to shock and wear due to their extra thick plates and heat-treated pins.

Serie ASA super-reinforced
Are extraordinarily -resistant to shock load aand offer excellent tensile strenght thanks to their highest grade alloy steel and heat-treated components.

ASA Standard 80 Roller Chain Comparison
(Maximum Tensile Strength)

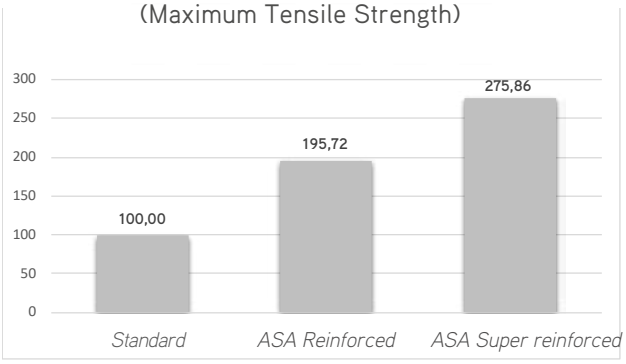

ISO REINFORCED

DIN/ISO No.	Material	Pitch P mm	Roller diameter d1 max mm	Width between Plates b1 min mm	Pin diameter d2 max mm	Pin lenght L max mm	Pin lenght Lc max mm	Inner Plate height h2 max mm	Traverse pitch Plate thickness t/T max mm	Minimun Tensile Strenght Q min KN	Weight per meter q kg/m
Simplex											
08B-1 H	CS, NP, DT, SS	12,70	8,51	7,85	4,45	18,80	19,90	12,00	2,00	20,60	0,88
10B-1 H	CS, NP, DT, SS	15,875	10,16	9,65	5,08	20,20	21,60	14,60	1,85	25	1,03
12B-1 H	CS, NP, DT, SS	19,05	12,07	11,70	6,10	25,00	26,60	18,10	2,42	40	1,45
16B-1 H	CS, NP, DT, SS	25,40	15,88	17,02	8,90	35,70	38,90	24,10	4/3	80	3,11
20B-1 H	CS, NP, DT, SS	31,75	19,05	19,56	10,19	47,10	51,00	26,30	6/4,8	95	4,52
24B-1 H	CS, NP, DT, SS	38,10	25,40	25,40	14,63	58,60	63,40	36,20	7,5/6	225	9,00
Duplex											
10B-2 H	CS, NP, DT, SS	15,875	10,16	9,65	5,08	37,70	39,40	14,60	1,85	50	1,78
12B-2 H	CS, NP, DT, SS	19,05	12,07	11,70	6,10	46,60	48,60	18,10	2,42	57,8	2,93
16B-2 H	CS, NP, DT, SS	25,40	15,88	17,02	8,90	67,80	69,30	24,10	4/3	160	5,97
20B-2 H	CS, NP, DT, SS	31,75	19,05	19,56	10,19	90,60	94,80	26,30	6/4,8	220	9,12
24B-2 H	CS, NP, DT, SS	38,10	25,40	25,40	14,63	112,00	118,60	36,30	7,5/6	450	16,70

ASA REINFORCED

DIN/ISO No.	ANSI No.	Material	Pitch P mm	Roller diameter d1 max mm	Width between Plates b1 min mm	Pin diameter d2 max mm	Pin lenght L max mm	Pin lenght Lc max mm	Inner Plate height h2 max mm	Traverse pitch Plate thickness t/T max mm	Minimun Tensile Strenght Q min KN	Weight per meter q kg/m
Simplex												
08A-1 H	40H	CS, DT, SS	12,70	7,95	7,85	3,96	18,80	19,90	12,00	2,03	14,10	0,82
10A-1 H	50H	CS, DT, SS	15,875	10,16	9,40	5,08	22,10	23,40	15,09	2,42	22,20	1,25
12A-1 H	60H	CS, DT, SS	19,05	11,91	12,57	5,94	29,20	31,00	18,00	3,25	31,80	1,87
16A-1 H	80H	CS, DT, SS	25,40	15,88	15,75	7,92	36,20	37,70	24,00	4,00	56,70	3,10
20A-1 H	100H	CS, DT, SS	31,75	19,05	18,90	9,53	43,60	46,90	30,00	4,80	88,50	4,52
24A-1 H	120H	CS, DT, SS	38,10	22,23	25,22	11,10	53,50	57,50	35,70	5,60	127,00	6,60
Duplex												
12A-2 H	60H-2	CS, DT, SS	19,05	11,91	12,57	5,94	55,30	57,10	18,00	3,25	63,60	3,71
16A-2 H	80H-2	CS, DT, SS	25,40	15,88	15,75	7,92	68,80	70,30	24,00	4,00	113,40	6,15
20A-2 H	100H-2	CS, DT, SS	31,75	19,05	18,90	9,53	82,70	86,00	30,00	4,80	177,00	9,03
24A-2 H	120H-2	CS, DT, SS	38,10	22,23	25,22	11,10	102,40	106,40	35,70	5,60	254,00	13,13
Triplex												
12A-3 H	60H-3	CS, DT, SS	19,05	11,91	12,57	5,94	81,40	83,20	18,00	3,25	95,00	5,54
16A-3 H	80H-3	CS, DT, SS	25,40	15,88	15,75	7,92	101,40	102,90	24,00	4,00	170,10	9,42
20A-3 H	100H-3	CS, DT, SS	31,75	19,05	18,90	9,53	121,80	125,10	30,00	4,80	265,50	12,96
24A-3 H	120H-3	CS, DT, SS	38,10	22,23	25,22	11,10	151,20	155,20	35,70	5,60	381,00	19,64

CS CARBON STTEEL
DT DELTA-TONE
NP NICKELLED PLATED
SS STAINLESS STEEL

ASA super reinforced Serie DIN ISO 606 (DIN 8188)

Simplex

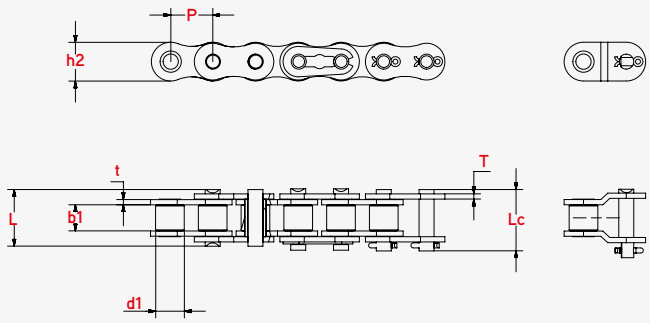

Duplex

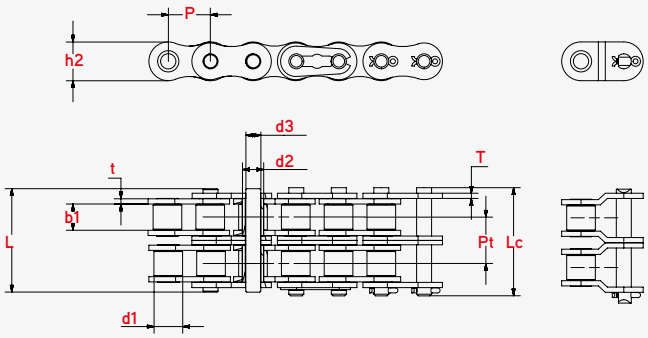

ASA SUPER REINFORCED

DIN/ISO No.	ANSI No.	Material	Pitch P mm	Roller diameter d1 max mm	Width between Plates b1 min mm	Pin diameter d2 max mm	Pin lenght L max mm	Pin lenght Lc max mm	Inner Plate height h2 max mm	Traverse pitch Plate thickness t/T max mm	Minimun Tensile Strenght Q min KN	Weight per meter q kg/m
Simplex												
08A-1 SH	40SH	CS, DT	12,700	7,95	7,85	3,96	18,80	19,90	12,00	2,03	22,40	0,82
10A-1 SH	50SH	CS, DT	15,875	10,16	9,40	5,08	22,10	23,40	15,09	2,40	30,40	1,23
12A-1 SH	60SH	CS, DT	19,050	11,91	12,57	5,96	29,20	31,60	18,10	3,20	44,10	1,87
16A-1 SH	80SH	CS, DT	25,400	15,88	15,75	7,94	36,20	37,70	24,13	4,00	80,00	3,10
20A-1 SH	100SH	CS, DT	31,750	19,05	18,90	9,54	43,60	46,90	30,17	4,70	133,4	4,52
24A-1 SH	120SH	CS, DT	38,100	22,23	25,22	11,11	53,50	57,50	36,20	5,60	158,20	6,60

CS CARBON STEEL
DT DELTA-TONE





IRIS non standard Series

IRIS Non Standard Chains are solutions purposely designed for a variety of specific needs and requirements suggested by our clients. Some of these are the outcome of customizations to our motorcycle chains.

Each chain is as distinct on its specifications as its intended application.

SERVICES

Tailored designs at specific needs and requests.

Many references **available in stock**.

Specific product on request.

Matched pairs on request for chains working in parallel.

Chains of any length.

Technical assistance.

		Pitch	Roller diameter	Width between Plates	Pin diameter	Pin lenght		Inner Plate height	Traverse pitch Plate thickness	Minimun Tensile Strenght	Weight per meter
DIN/ISO No.	Material	P mm	d1 max mm	b1 min mm	d2 max mm	L max mm	Lc max mm	h2 max mm	t/T max mm	Q min KN	q kg/m
Simplex											
081-1	CS, NP, DT, SS	12,700	7,75	3,30	3,64	9,30	10,80	9,80	1,00	8,00	0,38
083-1	CS, NP, DT, SS	12,700	7,75	4,88	4,09	12,90	14,40	10,20	1,30	11,60	0,45
084-1	CS, NP, DT, SS	12,700	7,75	4,88	4,09	14,80	16,80	10,20	1,40	15,60	0,51
085-1	CS, NP, DT, SS	12,700	7,75	6,25	3,60	14,00	15,50	10,20	1,30	6,70	0,41
415	CS, NP, DT, SS	12,700	7,77	4,76	3,60	11,00	12,40	9,70	1,00	6,86	0,32
415H	CS, NP, DT, SS	12,700	7,77	4,76	3,96	13,10	14,50	12,00	1,50	14,40	0,55
423	CS, NP, DT, SS	12,700	8,51	6,40	4,45	15,60	17,10	12,40	1,70	19,60	0,71
420	CS, NP, DT, SS	12,700	7,,77	6,25	3.96	14,70	16,10	12,00	1,50	16,00	0,55
428H	CS, NP, DT, SS	12,700	8,51	7,85	4,45	18,80	19,90	11,80	2,03	20,60	0,79
520	CS, NP, DT, SS	12,700	10,,16	6,25	5,08	17,50	19,00	15,09	2,03	26,50	0,89
520H	CS, NP, DT, SS	12,700	10,16	6,25	5,08	19,30	20,80	15,09	2,42	26,50	1,10
5R	CS, NP, DT, SS	12,700	7,75	5,00	3,96	11,80	13,30	10,10	1,3/1,0	11,60	0,46
12BV	CS, NP, DT, SS	19,050	12,07	11,68	6,10	24,50	26,90	16,00	2,40	40,00	1,45
229	CS, NP, DT, SS	19,050	12,07	13,30	6,10	28,80	31,80	17,00	3,00	35,00	1,61
517	CS, NP, DT, SS	19,050	12,07	11,68	6,10	24,50	26,90	18,10	2,40	44,00	1,55
305	CS, NP, DT, SS	25,400	15,88	13,05	8,26	30,90	32,20	20,50	3,6/3,0	50,00	2,37

CS CARBON STEEL
DT DELTA-TONE
NP NICKELLED PLATED
SS STAINLESS STEEL



Standard roller chains with straight side plates

These roller chains are designed and manufactured to the same standards as all IRIS standard roller chains, and havestraight side plates which allow rollers to convey higher loads directly on the side plate.

Roller chains with straight side plates are thus used in conveying systems of high-demanding industries like the automotive or automation, or for activities such as pallet transportation. They provide a long service life and outstanding wear resistance for all applications.

Our standard lubrication ensures resistance to a temperature range from -5 ºC to +120 ºC; a special lube can be applied at request for applications with temperatures from -30 ºC to +250 ºC.

SERVICES

- **Special lubricant on request for extreme temperature conditions.**
- Many references **available in stock.**
- **Specific chains** upon customer request.
- **Matched pairs** on request for chains working in parallel.
- **Chains of any length.**
- **Technical assistance.**

HIGHLIGHTS

- ✓ All IRIS Standard roller chains meet or exceed the requirements of ISO 606.
- ✓ Initial stretching contributes to a higher fatigue strenght.
- ✓ All components are heat-treated according to their size and application.
- ✓ Shot peening is applied to precision plates for higher resistance.
- ✓ Pins' surface is smooth and wear-resistant.
- ✓ Bushes are perfectly cylindrical.
- ✓ Special initial lubricant is applied to increase resistance.

Roller chains with straight side plates are able to convey loads vertically. Each reference can convey the following amount of vertical load:

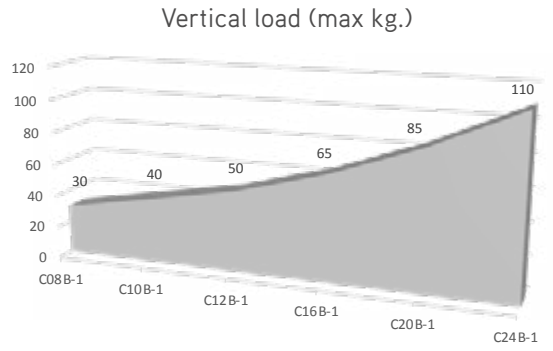

Industries

- ✓ Industrial handling
- ✓ End of line food packaging machinery
- ✓ Pharmaceutical sector
- ✓ Confectionery production plants
- ✓ Pasta production and bakery machinery
- ✓ Painting systems
- ✓ Wood industry machinery
- ✓ Ceramic systems
- ✓ Many more industrial applications

ISO straight plate Serie DIN ISO 606 (DIN 8187)

Simplex

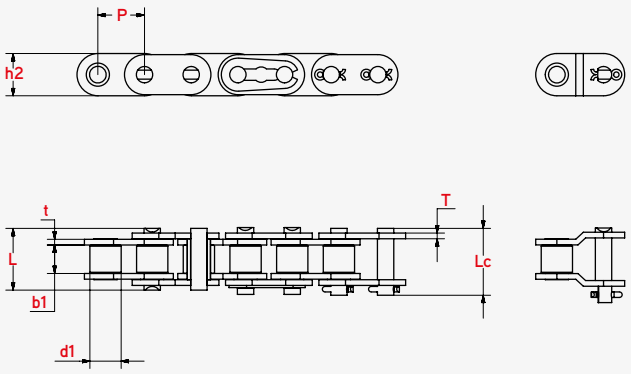

Duplex

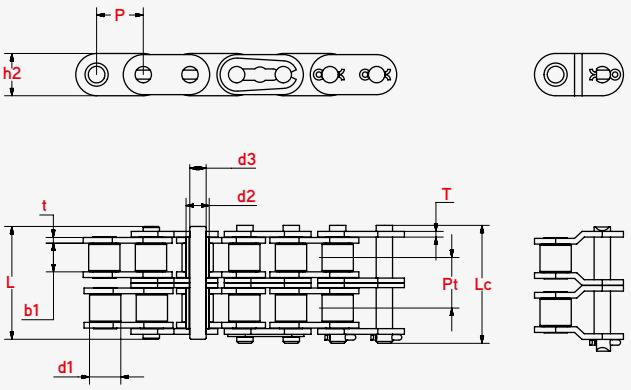

		Pitch	Roller diameter	Width between Plates	Pin diameter	Pin lenght		Inner Plate height	Traverse pitch Plate thickness	Minimun Tensile Strenght	Weight per meter
DIN/ISO No.	Material	P mm	d1 max mm	b1 min mm	d2 max mm	L max mm	Lc max mm	h2 max mm	t/T max mm	Q min KN	q kg/m
Simplex											
C08B-1	CS, NP, DT, SS	12,700	8,51	7,75	4,45	16,70	18,20	11,80	1,60	18,00	0,80
C10B-1	CS, NP, DT, SS	15,875	10,16	9,65	5,08	19,50	20,90	14,70	1,70	22,40	1,06
C12B-1	CS, NP, DT, SS	19,050	12,07	11,68	5,72	22,50	25,20	16,00	1,85	29,00	1,32
C16B-1	CS, NP, DT, SS	25,400	15,88	17,02	8,28	36,10	39,10	21,00	4,15/3,1	60,00	3,08
*C16B-1	CS, DT, SS	25,400	15,88	17,02	8,28	36,10	39,10	24,00	4,15/3,1	60,00	3,49
C20B-1	CS, NP, DT, SS	31,750	19,05	19,56	10,19	41,30	45,00	26,40	4,5/3,5	95,00	4,16
C24B-1	CS, DT, SS	38,100	25,40	25,40	14,63	53,40	57,80	33,20	6,0/4,8	160,00	7,47
C28B-1	CS, DT, SS	44,450	27,94	30,99	15,90	65,10	69,50	36,70	7,5/6,0	200,00	9,90
C32B-1	CS, SS	50,800	29,21	30,99	17,81	66,00	71,00	42,00	7,0/6,0	250,00	10,45
Duplex											
C08B-2	CS, NP, DT, SS	12,700	8,51	7,75	4,45	31,20	32,20	11,80	1,60	32,00	1,45
C10B-2	CS, NP, DT, SS	15,875	10,16	9,65	5,08	36,10	37,50	14,70	1,70	44,50	2,00
C12B-2	CS, NP, DT, SS	19,050	12,07	11,68	5,72	42,00	44,70	16,00	1,85	57,80	2,62
CC16B-2	CS, NP, DT, SS	25,400	15,88	17,02	8,28	68,00	71,00	21,00	4,15/3,1	106,00	6,10
*C16B-2	CS, NP, DT, SS	25,400	15,88	17,02	8,28	68,00	71,00	24,00	4,15/3,1	106,00	6,92
C20B-2	CS, NP, DT, SS	31,750	19,05	19,56	10,19	77,80	81,50	26,40	4,5/3,5	170,00	8,23
C24B-2	CS, DT, SS	38,100	25,40	25,40	14,63	101,70	106,20	33,20	6,0/4,8	280,00	14,77
C28B-2	CS, DT, SS	44,450	27,94	30,99	15,90	124,60	129,10	36,70	7,5/6,0	360,00	19,82
C32B-2	CS, SS	50,800	29,21	30,99	17,81	124,60	129,60	42,00	7,0/6,0	450,00	20,94

*** h2=24mm.**

CS CARBON STEEL
DT DELTA-TONE
NP NICKELLED PLATED
SS STAINLESS STEEL





ISO straight plate Serie DIN ISO 606 (DIN 8187)

Triplex

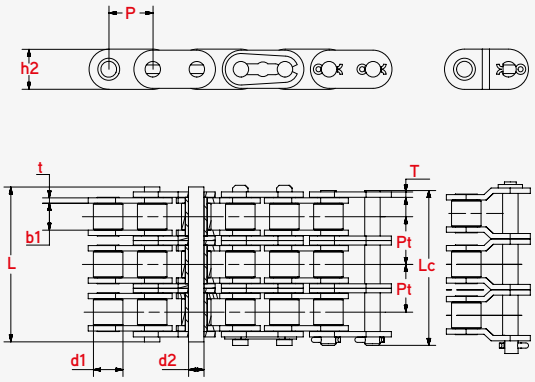

Quadruplex

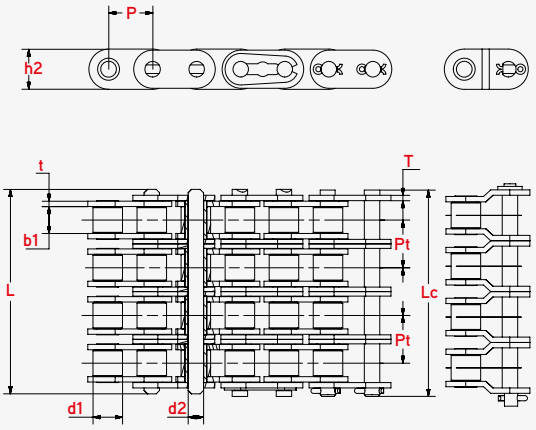

		Pitch	Roller diameter	Width between Plates	Pin diameter	Pin lenght		Inner Plate height	Traverse pitch Plate thickness	Minimun Tensile Strenght	Weight per meter
DIN/ISO No.	Material	P mm	d1 max mm	b1 min mm	d2 max mm	L max mm	Lc max mm	h2 max mm	t/T max mm	Q min KN	q kg/m
Triplex											
C08B-3	CS, NP, DT, SS	12,700	8,51	7,75	4,45	45,10	46,10	11,80	1,60	47,50	2,10
C10B-3	CS, NP, DT, SS	15,875	10,16	9,65	5,08	52,70	54,10	14,70	1,70	66,70	2,87
C12B-3	CS, NP, DT, SS	19,050	12,07	11,68	5,72	61,50	64,20	16,00	1,85	86,70	3,89
C16B-3	CS, NP, DT, SS	25,400	15,88	17,02	8,28	99,80	102,90	21,00	4,15/3,1	160,00	9,12
*C16B-3	CS, NP, DT, SS	25,400	15,88	17,02	8,28	99,80	102,90	24,00	4,15/3,1	160,00	10,34
C20B-3	CS, NP, DT, SS	31,750	19,05	19,56	10,19	114,20	117,90	26,40	4,5/3,5	250,00	11,34
C24B-3	CS, DT, SS	38,100	25,40	25,40	14,63	150,10	154,60	33,20	6,0/4,8	425,00	22,10
C28B-3	CS, DT, SS	44,450	27,94	30,99	15,90	184,20	188,70	36,70	7,5/6,0	530,00	29,64
C32B-3	CS, SS	50,800	29,21	30,99	17,81	183,20	188,20	42,00	7,0/6,0	670,00	31,27
Quadruplex											
C08B-4	CS, NP, DT, SS	12,700	8,51	7,75	4,45	58,30	66,10	11,80	1,60	65,85	2,80
C10B-4	CS, NP, DT, SS	15,875	10,16	9,65	5,08	68,80	77,00	14,70	1,70	88,00	3,60
C12B-4	CS, NP, DT, SS	19,050	12,07	11,68	5,72	81,00	99,20	16,00	1,85	115,80	5,35
C16B-4	CS, NP, DT, SS	25,400	15,88	17,02	8,28	132,00	142,80	21,00	4,15/3,1	222,00	11,63

*** h2=24mm.**

CS CARBON STEEL
DT DELTA-TONE
NP NICKELLED PLATED
SS STAINLESS STEEL



ASA straight mesh Serie DIN ISO 606 (DIN 8188)

Simplex

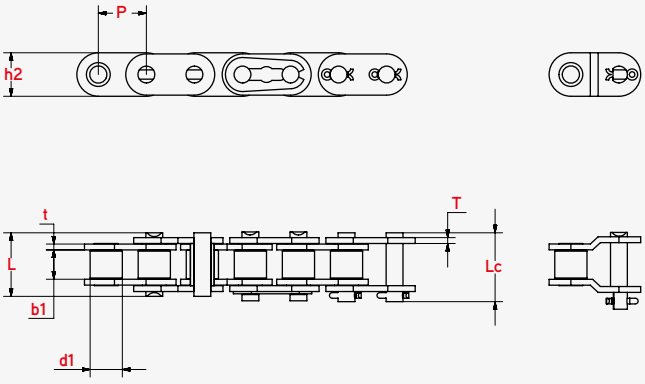

Duplex

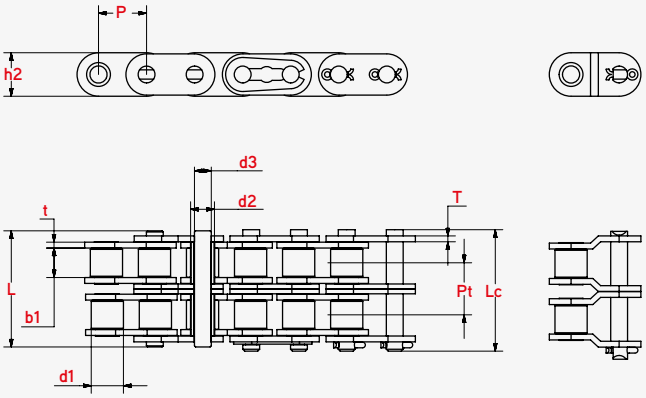

			Pitch	Roller diameter	Width between Plates	Pin diameter	Pin lenght		Inner Plate height	Traverse pitch Plate thickness	Minimun Tensile Strenght	Weight per meter
DIN/ISO No.	ANSI No.	Material	P mm	d1 max mm	b1 min mm	d2 max mm	L max mm	Lc max mm	h2 max mm	t/T max mm	Q min KN	q kg/m
Simplex												
C08A-1	C40	CS, DT, SS	12,700	7,95	7,85	3,96	16,60	18,80	12,00	1,50	14,10	0,73
C10A-1	C50	CS, DT, SS	15,875	10,16	9,40	5,08	20,70	23,30	15,09	2,03	22,20	1,23
C12A-1	C60	CS, DT, SS	19,050	11,91	12,57	5,94	25,90	28,30	18,00	2,42	31,80	1,81
C16A-1	C80	CS, DT, SS	25,400	15,88	15,75	7,92	32,70	36,50	24,00	3,25	56,70	3,09
C20A-1	C100	CS, DT, SS	31,750	19,05	18,90	9,53	40,40	44,70	30,00	4,00	88,50	4,56
Duplex												
C08A-2	C40-2	CS, DT, SS	12,700	7,95	7,85	3,96	31,00	33,20	12,00	1,50	28,20	1,43
C10A-2	C50-2	CS, DT, SS	15,875	10,16	9,40	5,08	38,90	41,40	15,09	2,03	44,40	2,42
C12A-2	C60-2	CS, DT, SS	19,050	11,91	12,57	5,94	48,80	51,10	18,00	2,42	63,60	3,58
C16A-2	C80-2	CS, DT, SS	25,400	15,88	15,75	7,92	62,70	65,80	24,00	3,25	113,40	6,12
C20A-2	C100-2	CS, DT, SS	31,750	19,05	18,90	9,53	76,40	80,50	30,00	4,00	177,00	9,08
Triplex												
C08A-3	C40-3	CS, DT, SS	12,700	7,95	7,85	3,96	45,40	47,60	12,00	1,50	42,30	2,14
C10A-3	C50-3	CS, DT, SS	15,875	10,16	9,40	5,08	57,00	59,50	15,09	2,03	66,60	3,62
C12A-3	C60-3	CS, DT, SS	19,050	11,91	12,57	5,94	71,50	73,90	18,00	2,42	95,40	5,36
C16A-3	C80-3	CS, DT, SS	25,400	15,88	15,75	7,92	91,70	95,10	24,00	3,25	170,10	9,10
C20A-3	C100-3	CS, DT, SS	31,750	19,05	18,90	9,53	112,20	116,30	30,00	4,00	265,50	13,60

CS CARBON STEEL
DT DELTA-TONE
SS STAINLESS STEEL

Standard roller chains

IRIS chains

www.iris-chains.com

SINCE 1935

Polígono Ind. Erisono nº 1
20600 Eibar (Guipuzcoa) España

T +34 943 120 550
iris@iris-chains.com