

IRIS chains

www.iris-chains.com

SINCE 1935

Roller chains with attachments extended pins

IRIS roller chains may be adapted for conveying duties by the addition of attachments.

T +34 943 120 550
iris@iris-chains.com
www.iris-chains.com

Roller chains with attachments and extended pins

IRIS roller chains may be adapted for conveying duties by the addition of attachments. These conveyor chains are available with standard bent or straight type attachments on one or both sides. Many assembled chains and components are stocked for quick delivery.

Attachments for standard roller type chain and for oversize roller type chain have the same dimensions. Attachments can be spaced as desired upon request. We stock not only bent attachment plates in IRIS standard dimensions, but also in a variety of market standard dimensions.

Available in nickeled plated, delta tone and in stainless steel versions.

SERVICES

Assembled chains available in stock.

Corrosion-resistant versions available
(nickeled Plated, delta tone, stainless steel)

Matched pairs *on request for chains working in parallel.*

Spaced as desired *upon request.*

Chains of any length.

Technical assistance.

Rapid Service

Variety of market standard Dimensions

With bent attachments ISO 606

ISO SERIES A1 / K1

DIN/ISO No.	Material		P mm	G mm	F mm	W mm	T mm	h4 mm	d4 mm
6B-1	CS,NP, DT	IRIS	9,525	8,00	19,00	27,0	1,15	6,5	3,5
6B-1	CS,NP, DT, SS	Type 1	9,525	8,00	19,04	27,0	1,20	6,5	3,5
8B-1	CS,NP, DT	IRIS	12,700	11,00	27,6	38,4	1,55	8,75	4,3
8B-1	CS,NP, DT, SS	Type 1	12,700	9,50	25,4	36,4	1,5	8,9	4,3
8B-1	CS, DT **	Type 2	12,700	9,50	25,3	36,4	1,6	8,9	4,5
8B-1	CS, DT **	Type 3	12,700	11,00	25,4	41,7	1,6	8,9	4,3
8B-1	CS, DT **	Type 4	12,700	10,60	27,6	39,4	1,6	8,5	4,3
8B-1	CS, DT **	Type 5	12,700	12,50	26,2	38,0	1,6	10,0	4,5
8B-1	CS, DT **	Type 6	12,700	9,50	28,2	37,2	1,4	8,4	4,3
8B-1	CS, DT **	Type 7	12,700	11,40	23,80	34,3	1,6	8,90	4,20
10B-1	CS,NP, DT	IRIS	15,875	14,00	31,60	45,60	1,6	10,50	5,30
10B-1	CS,NP, DT, SS	Type 1	15,875	14,30	31,80	44,60	1,6	10,30	5,30
10B-1	CS, DT **	Type 2	15,875	14,30	31,80	44,60	1,7	10,30	5,30
10B-1	CS, DT **	Type 3	15,875	14,00	31,80	49,60	1,7	10,30	5,30
10B-1	CS, DT **	Type 4	15,875	12,50	29,80	47,00	1,7	10,30	5,40
10B-1	CS, DT **	Type 5	15,875	15,00	33,40	54,00	1,7	10,00	5,50
10B-1	CS, DT **	Type 6	15,875	14,10	31,80	47,60	1,53	10,40	5,20
10B-1	CS, DT **	Type 7	15,875	12,70	31,80	41,20	1,5	10,20	5,00
12B-1	CS,NP, DT	IRIS	19,050	18,00	35,50	54,90	1,8	11,60	6,40
12B-1	CS,NP, DT, SS	Type 1	19,050	16,00	38,10	52,40	1,8	13,46	6,40
12B-1	CS, DT **	Type 2	19,050	16,00	38,20	52,50	1,9	13,50	6,40
12B-1	CS, DT **	Type 3	19,050	18,00	38,20	52,80	1,9	13,50	6,60
12B-1	CS, DT **	Type 4	19,050	16,00	38,20	52,90	1,9	13,50	7,20
12B-1	CS, DT **	Type 5	19,050	18,50	37,30	58,10	1,9	11,00	6,60
12B-1	CS, DT **	Type 6	19,050	16,00	35,00	51,60	1,9	12,00	5,60
12B-1	CS, DT **	Type 7	19,050	16,50	38,10	55,60	1,8	13,50	7,10
16B-1	CS,NP, DT	IRIS	25,400	24,00	53,80	77,70	3,0	16,30	8,20
16B-1	CS,NP, DT, SS	Type 1	25,400	19,10	50,80	72,60	3,0	15,88	6,40
16B-1	CS, DT **	Type 2	25,400	19,10	50,90	72,70	3,1	15,90	6,40
16B-1	CS, DT **	Type 3	25,400	24,00	50,80	85,60	3,1	15,90	6,60
16B-1	CS, DT **	Type 4	25,400	19,00	53,00	75,00	3,1	15,90	6,60
16B-1	CS, DT **	Type 5	25,400	25,00	57,80	84,00	3,1	18,00	9,00
16B-1	CS, DT **	Type 6	25,400	19,00	50,80	74,80	3,0	15,90	6,80
16B-1	CS, DT **	Type 7	25,400	24,30	47,60	68,80	3,2	15,20	6,70

Roller chains with bent attachments ISO 606

ISO SERIES A1 / K1

DIN/ISO No.	Material		P mm	G mm	F mm	W mm	T mm	h4 mm	d4 mm
20B-1	CS,NP, DT	IRIS	31,750	35,00	63,50	100,50	3,5	19,84	9,00
20B-1	CS, NP, DT, SS	Type 1	31,750	35,00	63,00	100,50	4,0	19,80	9,00
20B-1	CS, DT **	Type 2	31,750	35,00	63,50	100,50	3,5	19,80	8,40
20B-1	CS, DT **	Type 6	31,750	25,25	63,50	85,70	3,4	19,85	8,40
24B-1	CS, DT, SS	Type 1	38,100	30,00	76,20	108,40	4,8	26,67	10,50
28B-1	CS, DT, SS	Type 1	44,450	35,00	88,90	123,00	6,0	28,58	13,10
32B-1	CS, DT, SS	Type 1	50,800	38,10	101,60	142,80	6,0	31,75	13,10

** Under Request

CS CARBON STEEL
DT DELTA-TONE
NP NICKELED PLATED
SS STAINLESS STEEL

Attachment 90º 1 hole 1 side
A-1

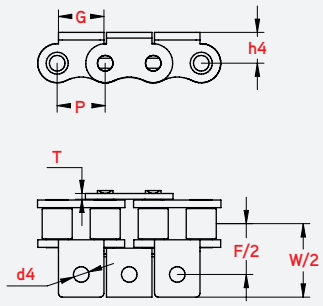

Attachment 90º 1 hole 2 sides
K-1

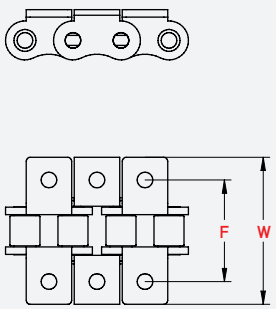

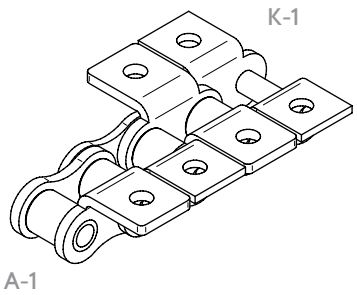

ISO SERIES WA-2 / WK-2

DIN/ISO No.	Material		P mm	G mm	F mm	W mm	T mm	h4 mm	d4 mm	L mm
6B-1	CS,NP, DT	IRIS	9,525	17,75	19,00	27,0	1,15	6,5	3,5	9,525
6B-1	CS,NP, DT, SS	Type 1	9,525	17,75	19,00	27,0	1,2	6,5	3,5	9,525
8B-1	CS,NP, DT	IRIS	12,700	24,20	27,6	38,4	1,55	8,75	4,3	12,700
8B-1	CS,NP, DT, SS	Type 1	12,700	23,30	25,4	36,4	1,50	8,9	4,3	12,700
8B-1	CS, DT **	Type 2	12,700	23,30	25,3	36,4	1,6	8,9	4,3	12,700
8B-1	CS, DT **	Type 3	12,700	24,40	25,4	41,7	1,6	8,9	4,3	12,700
8B-1	CS, DT **	Type 4	12,700	24,40	26,0	39,4	1,6	8,5	4,3	12,700
8B-1	CS, DT **	Type 5	12,700	23,20	26,2	38,0	1,6	10,0	4,5	12,700
8B-1	CS, DT **	Type 6	12,700	23,05	28,2	37,2	1,40	8,4	4,3	12,700
8B-1	CS, DT **	Type 7	12,700	24,60	25,40	40,6	1,6	8,90	4,90	12,700
10B-1	CS,NP, DT	IRIS	15,875	29,90	31,60	45,60	1,6	10,50	5,30	15,875
10B-1	CS,NP, DT, SS	Type 1	15,875	29,58	31,80	44,60	1,6	10,30	5,30	15,875
10B-1	CS, DT **	Type 2	15,875	29,60	31,80	44,60	1,7	10,30	5,30	15,875
10B-1	CS, DT **	Type 3	15,875	29,90	31,80	49,60	1,7	10,30	5,30	15,875
10B-1	CS, DT **	Type 4	15,875	28,60	30,00	42,16	1,7	10,30	5,10	15,875
10B-1	CS, DT **	Type 5	15,875	28,50	33,40	54,00	1,7	10,00	5,50	15,875
10B-1	CS, DT **	Type 6	15,875	28,60	31,80	47,60	1,53	10,30	5,20	15,875
10B-1	CS, DT **	Type 7	15,875	30,00	31,80	45,70	1,5	10,20	5,00	15,875

Roller chains with bent attachments ISO 606

ISO SERIES WA-2 / WK-2

DIN/ISO No.	Material		P mm	G mm	F mm	W mm	T mm	h4 mm	d4 mm	L mm
12B-1	CS,NP, DT	IRIS	19,050	35,25	35,50	54,90	1,8	11,60	6,40	19,050
12B-1	CS,NP, DT, SS	Type 1	19,050	34,05	38,10	52,40	1,8	13,46	6,40	19,050
12B-1	CS, DT **	Type 2	19,050	35,10	38,20	52,50	1,9	13,50	6,40	19,050
12B-1	CS, DT **	Type 3	19,050	35,40	38,20	52,80	1,9	13,50	6,60	19,050
12B-1	CS, DT **	Type 4	19,050	35,20	36,10	55,30	1,9	12,00	6,60	19,050
12B-1	CS, DT **	Type 5	19,050	33,60	37,30	58,10	1,9	11,00	6,60	19,050
12B-1	CS, DT **	Type 6	19,050	34,90	35,00	62,80	1,9	12,00	5,60	19,050
12B-1	CS, DT **	Type 7	19,050	34,80	34,90	51,30	1,8	11,40	5,50	19,050
16B-1	CS,NP, DT	IRIS	25,400	46,00	53,80	77,60	3,0	16,30	8,20	25,400
16B-1	CS,NP, DT, SS	Type 1	25,400	46,40	50,80	72,60	3,0	15,88	6,40	25,400
16B-1	CS, DT **	Type 2	25,400	46,40	50,80	72,70	3,1	15,90	6,40	25,400
16B-1	CS, DT **	Type 3	25,400	46,20	50,80	85,60	3,1	15,90	6,60	25,400
16B-1	CS, DT **	Type 4	25,400	45,80	50,80	73,60	3,1	19,00	8,30	25,400
16B-1	CS, DT **	Type 5	25,400	46,50	57,80	84,00	3,1	18,00	9,00	25,400
16B-1	CS, DT **	Type 6	25,400	45,85	50,80	79,40	3,0	15,90	6,80	25,400
16B-1	CS, DT **	Type 7	25,400	46,00	57,20	78,50	3,2	15,90	6,70	25,400
20B-1	CS,NP, DT	IRIS	31,750	58,10	63,50	100,50	3,5	19,80	9,00	31,750
20B-1	CS,NP, DT, SS	Type 1	31,750	58,10	63,00	100,50	4,0	19,80	9,00	31,750
20B-1	CS, DT **	Type 2	31,750	58,10	63,50	100,50	3,5	19,80	8,40	31,750
20B-1	CS, DT **	Type 6	31,750	46,00	69,80	88,80	4,2	20,00	8,50	31,750
24B-1	CS, DT, SS	Type 1	38,100	71,30	76,20	108,40	4,8	26,67	10,50	38,100
28B-1	CS, DT, SS	Type 1	44,450	81,10	88,90	123,00	6,0	28,58	13,10	44,450
32B-1	CS, DT, SS	Type 1	50,800	92,80	101,60	142,80	6,0	31,75	13,10	50,800

** Under Request

CS CARBON STEEL
DT DELTA-TONE
NP NICKELED PLATED
SS STAINLESS STEEL

Attachment 90º 2 holes 1 side
WA-2

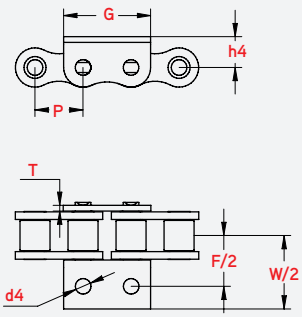

Attachment 90º 2 holes 2 sides
WK-2

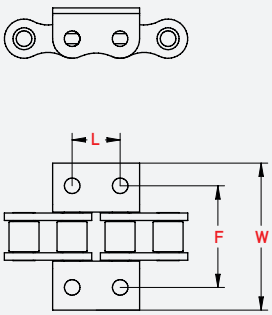

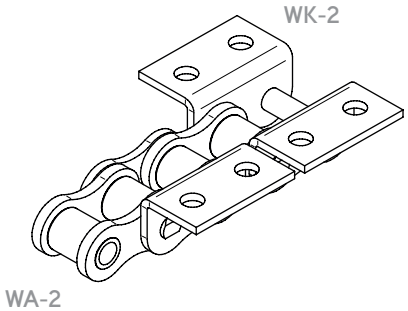

Roller chains with straight attachments ISO 606

ISO SERIES SA1 / SK1

DIN/ISO No.	Material		P mm	G mm	C mm	F mm	T mm	d4 mm
6B-1	CS,NP, DT	IRIS	9,525	8,00	9,50	13,50	1,15	3,5
6B-1	CS,NP, DT, SS	Type 1	9,525	8,00	9,52	13,50	1,2	3,5
8B-1	CS,NP, DT	IRIS	12,700	11,00	14,10	19,5	1,55	4,3
8B-1	CS,NP, DT, SS	Type 1	12,700	9,50	13,35	18,9	1,5	4,3
8B-1	CS, DT **	Type 2	12,700	9,50	13,35	18,9	1,6	4,5
8B-1	CS, DT **	Type 3	12,700	11,00	13,70	20,8	1,6	4,3
8B-1	CS, DT **	Type 4	12,700	10,60	12,70	19,0	1,6	4,3
8B-1	CS, DT **	Type 5	12,700	12,50	14,70	20,3	1,6	4,5
8B-1	CS, DT **	Type 6	12,700	9,50	14,10	19,2	1,4	5,5
8B-1	CS, DT **	Type 7	12,700	11,40	12,70	19,30	1,6	4,20
10B-1	CS,NP, DT	IRIS	15,875	14,00	16,20	23,20	1,6	5,30
10B-1	CS,NP, DT, SS	Type 1	15,875	14,30	16,50	22,95	1,6	5,30
10B-1	CS, DT **	Type 2	15,875	14,30	16,50	22,90	1,7	5,30
10B-1	CS, DT **	Type 3	15,875	14,00	16,50	24,90	1,7	5,30
10B-1	CS, DT **	Type 4	15,875	12,50	15,90	23,40	1,7	5,10
10B-1	CS, DT **	Type 5	15,875	15,00	17,20	26,70	1,7	5,50
10B-1	CS, DT **	Type 6	15,875	14,10	15,90	23,70	1,53	5,20
10B-1	CS, DT **	Type 7	15,875	12,70	15,90	22,90	1,5	5,00
12B-1	CS,NP, DT	IRIS	19,050	18,00	18,20	28,10	1,8	6,40
12B-1	CS,NP, DT, SS	Type 1	19,050	16,00	21,45	28,60	1,8	6,40
12B-1	CS, DT **	Type 2	19,050	16,00	21,40	28,60	1,9	6,40
12B-1	CS, DT **	Type 3	19,050	18,00	21,00	28,20	1,9	6,60
12B-1	CS, DT **	Type 4	19,050	16,00	17,70	28,00	1,9	5,40
12B-1	CS, DT **	Type 5	19,050	18,50	18,70	29,00	1,9	6,60
12B-1	CS, DT **	Type 6	19,050	16,00	17,90	26,20	1,9	5,60
12B-1	CS, DT **	Type 7	19,050	16,50	22,20	32,05	1,8	7,10
16B-1	CS,NP, DT	IRIS	25,400	24,00	25,40	37,40	3,0	8,20
16B-1	CS,NP, DT, SS	Type 1	25,400	19,10	23,15	34,00	3,0	6,40
16B-1	CS, DT **	Type 2	25,400	19,10	23,20	34,00	3,1	6,40
16B-1	CS, DT **	Type 3	25,400	24,00	23,00	39,70	3,1	6,60
16B-1	CS, DT **	Type 4	25,400	19,00	23,80	34,20	3,1	6,60
16B-1	CS, DT **	Type 5	25,400	25,00	28,60	41,50	3,1	9,00
16B-1	CS, DT **	Type 6	25,400	19,00	26,00	35,00	3,0	6,80
16B-1	CS, DT **	Type 7	25,400	24,30	23,90	34,10	3,2	6,70
20B-1	CS,NP, DT	IRIS	31,750	35,00	30,50	45,70	3,5	9,00
20B-1	CS,NP, DT, SS	Type 1	31,750	35,00	30,50	45,70	4,0	9,00
20B-1	CS, DT **	Type 6	31,750	25,25	31,75	42,00	3,4	8,40

** Under Request **CS** CARBON STEEL **NP** NICKELED PLATED
DT DELTA-TONE **SS** STAINLESS STEEL

Straight attachment 1 hole 1 side
SA-1

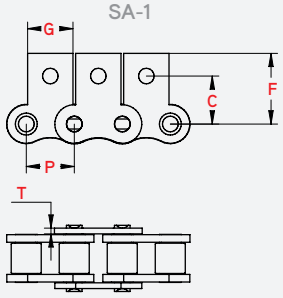

Straight attachment 1 hole 2 sides
SK-1

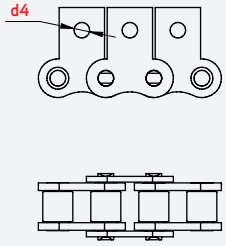

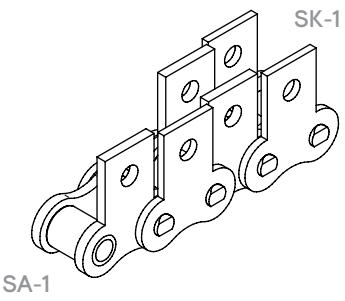

Roller chains with straight attachments ISO 606

ISO SERIES WSA-2 / WSK-2

DIN/ISO No.	Material		P mm	G mm	C mm	F mm	T mm	d4 mm
6B-1	CS,NP, DT	IRIS	9,525	17,75	9,50	13,50	1,15	3,5
6B-1	CS, NP, DT, SS	Type 1	9,525	17,75	9,52	13,50	1,20	3,5
8B-1	CS,NP, DT	IRIS	12,700	24,20	14,10	19,5	1,55	4,3
8B-1	CS, NP, DT, SS	Type 1	12,700	23,30	13,35	18,9	1,5	4,3
8B-1	CS, DT **	Type 2	12,700	23,30	13,30	18,9	1,6	4,3
8B-1	CS, DT **	Type 3	12,700	24,40	13,00	20,8	1,6	4,3
8B-1	CS, DT **	Type 4	12,700	23,70	12,30	17,2	1,6	4,3
8B-1	CS, DT **	Type 5	12,700	23,20	14,70	20,3	1,6	4,5
8B-1	CS, DT **	Type 6	12,700	23,05	14,10	19,2	1,4	4,6
8B-1	CS, DT **	Type 7	12,700	24,60	13,10	20,7	1,6	4,9
10B-1	CS,NP, DT	IRIS	15,875	29,90	16,20	23,20	1,6	5,30
10B-1	CS, NP, DT, SS	Type 1	15,875	29,58	16,50	22,95	1,6	5,30
10B-1	CS, DT **	Type 2	15,875	29,60	16,50	22,90	1,7	5,30
10B-1	CS, DT **	Type 3	15,875	29,90	16,50	24,90	1,7	5,30
10B-1	CS, DT **	Type 4	15,875	28,60	15,40	21,00	1,7	5,10
10B-1	CS, DT **	Type 5	15,875	28,50	17,20	26,70	1,7	5,50
10B-1	CS, DT **	Type 6	15,875	28,60	15,90	23,70	1,53	5,20
10B-1	CS, DT **	Type 7	15,875	30,00	16,60	23,60	1,5	5,00
12B-1	CS,NP, DT	IRIS	19,050	35,25	18,20	28,10	1,8	6,40
12B-1	CS, NP, DT, SS	Type 1	19,050	34,05	21,45	28,60	1,8	6,40
12B-1	CS, DT **	Type 2	19,050	35,10	21,40	28,60	1,9	6,40
12B-1	CS, DT **	Type 3	19,050	35,40	21,00	28,20	1,9	6,60
12B-1	CS, DT **	Type 4	19,050	35,20	20,00	29,80	1,9	6,60
12B-1	CS, DT **	Type 5	19,050	33,60	18,70	29,00	1,9	6,60
12B-1	CS, DT **	Type 6	19,050	34,90	17,90	32,00	1,9	5,60
12B-1	CS, DT **	Type 7	19,050	34,80	17,60	25,75	1,8	5,50
16B-1	CS,NP, DT	IRIS	25,400	46,00	25,40	37,40	3,0	8,20
16B-1	CS, NP, DT, SS	Type 1	25,400	46,40	23,15	34,00	3,0	6,40
16B-1	CS, DT **	Type 2	25,400	46,40	23,10	34,00	3,1	6,40
16B-1	CS, DT **	Type 3	25,400	46,20	23,00	39,70	3,1	6,60
16B-1	CS, DT **	Type 4	25,400	46,00	25,90	36,70	3,1	8,30
16B-1	CS, DT **	Type 5	25,400	46,50	28,60	41,50	3,1	9,00
16B-1	CS, DT **	Type 6	25,400	45,85	26,00	36,75	3,0	6,80
16B-1	CS, DT **	Type 7	25,400	46,00	26,00	36,70		8,10
20B-1	CS,NP, DT	IRIS	31,750	58,10	30,50	45,70	3,5	9,00
20B-1	CS, NP, DT, SS	Type 1	31,750	58,10	30,50	45,70	4,0	9,00
20B-1	CS, DT **	Type 2	31,750	58,10	30,50	63,50	3,5	8,40
20B-1	CS, DT **	Type 6	31,750	57,00	33,00	47,30	4,0	10,50

** Under Request **CS** CARBON STEEL **NP** NICKELED PLATED
DT DELTA-TONE **SS** STAINLESS STEEL

Straight attachment 2 holes 1 side
WSA-2

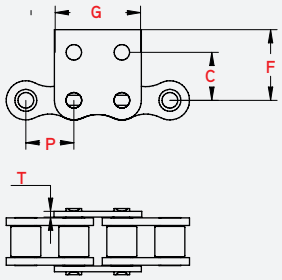

Straight attachment 2 holes 2 sides
WSK-2

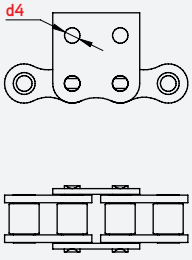

WSK-2

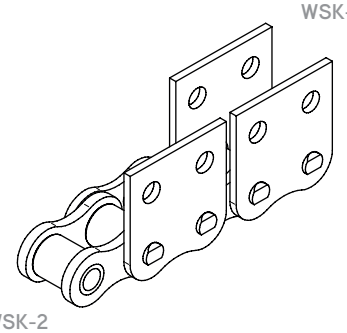

WSK-2

T +34 943 120 550
iris@iris-chains.com
www.iris-chains.com

Roller chains with bent attachments ANSI

ANSI SERIES A1 / K1

DIN/ISO No.	Material		P mm	G mm	F mm	W mm	T mm	h4 mm	d4 mm
35-1	CS, DT, SS	IRIS	9,53	7,90	19,00	28,60	1,30	6,35	3,40
40-1	CS, DT, SS	IRIS	12,70	9,50	25,40	35,20	1,50	7,90	3,40
50-1	CS, DT, SS	IRIS	15,875	12,70	31,75	46,20	2,03	10,30	5,50
60-1	CS, DT, SS	IRIS	19,05	15,90	38,10	55,60	2,42	11,90	5,50
80-1	CS, DT, SS	IRIS	25,40	19,10	50,80	64,80	3,25	15,90	6,80
100-1	CS, DT, SS	IRIS	31,75	25,40	63,50	87,30	4,00	19,80	9,20
120-1	CS, DT, SS	IRIS	38,10	28,60	76,20	108,50	4,80	23,00	9,80

CS CARBON STEEL
DT DELTA-TONE
NP NICKELED PLATED
SS STAINLESS STEEL

Attachment 90º 1 hole 1 side
A-1

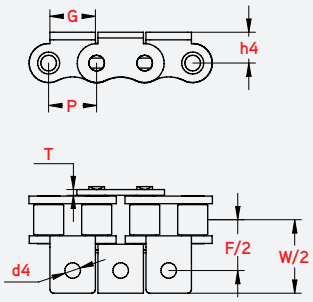

Attachment 90º 1 hole 2 sides
K-1

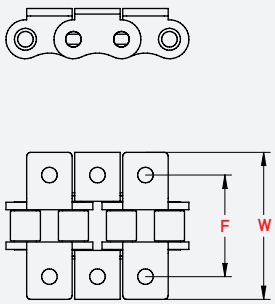

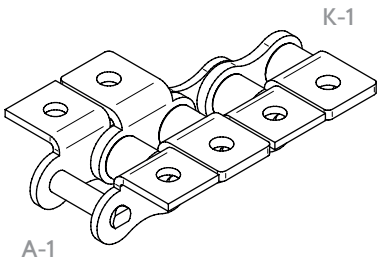

ANSI SERIES WA-2 / WK-2

DIN/ISO No.	Material		P mm	G mm	F mm	W mm	T mm	h4 mm	d4 mm	L mm
35-1	CS, DT, SS	IRIS	9,53	17,32	19,00	28,60	1,30	6,35	2,80	9,525
40-1	CS, DT, SS	IRIS	12,70	23,00	25,40	35,60	1,50	7,90	3,40	12,70
50-1	CS, DT, SS	IRIS	15,875	28,80	31,75	46,30	2,03	10,30	5,50	15,875
60-1	CS, DT, SS	IRIS	19,05	34,65	38,10	55,40	2,42	11,90	5,50	19,05
80-1	CS, DT, SS	IRIS	25,40	45,90	50,80	73,20	3,25	15,90	6,80	25,40
100-1	CS, DT, SS	IRIS	31,75	57,65	63,50	89,80	4,00	19,80	9,20	31,75
120-1	CS, DT, SS		38,10	69,30	76,20	108,80	4,80	23,00	9,80	38,10

CS CARBON STEEL
DT DELTA-TONE
NP NICKELED PLATED
SS STAINLESS STEEL

Attachment 90º 2 holes 1 side
WA-2

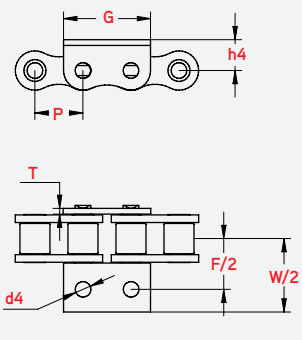

Attachment 90º 2 holes 2 sides
WK-2

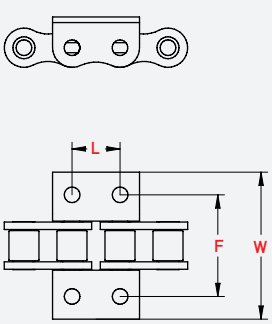

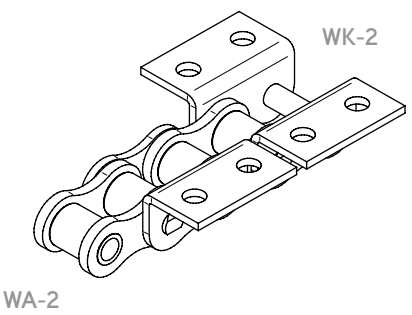

Roller chains with straight attachments ANSI

ANSI SERIES SA1 / SK1

DIN/ISO No.	Material		P mm	G mm	C mm	F mm	T mm	d4 mm
35-1	CS, DT, SS	IRIS	9,525	7,90	9,50	14,55	1,30	3,40
40-1	CS, DT, SS	IRIS	12,70	9,50	12,70	19,05	1,50	3,40
50-1	CS, DT, SS	IRIS	15,875	12,70	15,90	25,25	2,03	5,50
60-1	CS, DT, SS	IRIS	19,05	15,90	18,30	29,33	2,42	5,50
80-1	CS, DT, SS	IRIS	25,40	19,10	24,60	34,70	3,25	6,80
100-1	CS, DT, SS	IRIS	31,75	25,40	31,80	43,30	4,00	9,20
120-1	CS, DT, SS	IRIS	38,10	28,60	36,50	51,60	4,80	9,80

CS CARBON STEEL
DT DELTA-TONE
NP NICKELED PLATED
SS STAINLESS STEEL

Straight attachment 1 hole 1 side
SA-1

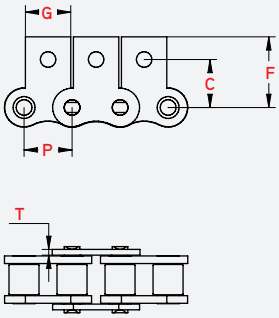

Straight attachment 1 hole 2 sides
SK-1

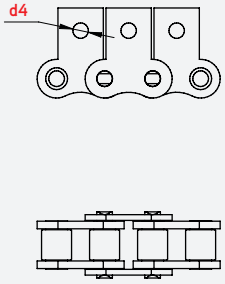

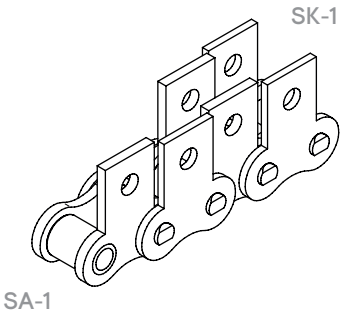

ANSI SERIES WSA-2 / WSK-2

DIN/ISO No.	Material		P mm	G mm	C mm	F mm	T mm	d4 mm	L mm
35-1	CS, DT, SS	IRIS	9,525	17,32	9,50	14,55	1,20	2,80	9,525
40-1	CS, DT, SS	IRIS	12,70	23,00	12,70	17,40	1,50	3,40	12,70
50-1	CS, DT, SS	IRIS	15,875	28,80	15,90	23,05	2,03	5,50	15,875
60-1	CS, DT, SS	IRIS	19,05	34,65	18,30	26,86	2,42	5,50	19,05
80-1	CS, DT, SS	IRIS	25,40	45,90	24,60	35,45	3,25	6,80	25,40
100-1	CS, DT, SS	IRIS	31,75	57,65	31,80	44,00	4,00	9,20	31,75
120-1	CS, DT, SS	IRIS	38,10	69,30	36,50	51,60	4,80	9,80	38,10

CS CARBON STEEL
DT DELTA-TONE
NP NICKELED PLATED
SS STAINLESS STEEL

Straight attachment 2 holes 1 side
WSA-2

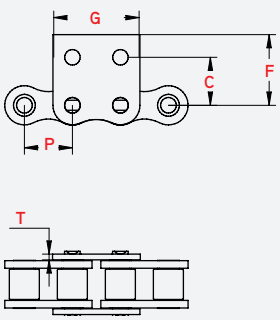

Straight attachment 2 holes 2 sides
WSK-2

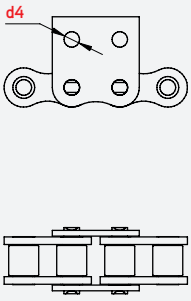

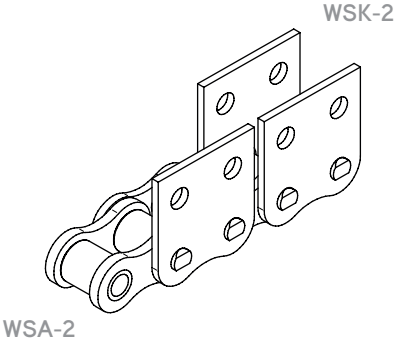

Roller chains with extended pins

Double extended pin - 1 side

ISO/ASA SERIES

DIN/ISO No.	Material	Pitch P mm	Roller diameter d1 max mm	width between plates b1 min mm	Pin diameter d2 max mm	Pin length L max mm	Pin length L3 mm	Pin length Lc max mm	Inner Plate height h2 mm	Plate thickness t/T max mm	Minimum Tensile strength Q min KN
06B-1	CS, DT, SS	9,525	6,35	5,72	3,28	23,40	11,10	24,70	8,20	1,30	9,00
08B-1	CS, DT, SS	12,70	8,51	7,75	4,45	30,70	15,30	32,10	11,50	1,50	19,40
10B-1	CS, DT, SS	15,88	10,16	9,65	5,08	35,70	17,90	37,35	14,70	1,60	27,50
12B-1	CS, DT, SS	19,05	12,07	11,68	5,72	42,00	21,00	43,15	16,00	1,80	32,20
16B-1	CS, DT, SS	25,40	15,88	17,02	8,28	67,40	34,00	69,40	21,00	3,00/4,00	72,80
20B-1	CS, DT, SS	31,75	19,05	19,56	10,19	77,80	39,30	80,20	26,40	3,50/4,50	106,70
08A-1	CS, DT, SS	12,70	7,95	7,85	3,96	31,30	14,90	33,70	12,00	1,50	14,10
10A-1	CS, DT, SS	15,88	10,16	9,40	5,08	39,80	19,50	41,55	15,09	2,00	22,20
12A-1	CS, DT, SS	19,05	11,91	12,57	5,94	49,20	24,40	50,95	18,00	2,00/2,40	31,80
16A-1	CS, DT, SS	25,40	15,88	15,75	7,92	61,90	31,40	64,70	24,00	3,25	56,70

Triple extended pin - 1 side

ISO/ASA SERIES

DIN/ISO No.	Material	Pitch P mm	Roller diameter d1 max mm	width between plates b1 min mm	Pin diameter d2 max mm	Pin length L max mm	Pin length L3 mm	Pin length Lc max mm	Inner Plate height h2 mm	Plate thickness t/T max mm	Minimum Tensile strength Q min KN
06B-1	CS, DT, SS	9,525	6,35	5,72	3,28	33,40	21,30	34,20	8,20	1,30	9,00
08B-1	CS, DT, SS	12,70	8,51	7,75	4,45	44,60	29,70	46,10	11,50	1,50	19,40
10B-1	CS, DT, SS	15,88	10,16	9,65	5,08	52,50	34,40	54,20	14,70	1,60	27,50
12B-1	CS, DT, SS	19,05	12,07	11,68	5,72	61,75	40,70	62,65	16,00	1,80	32,20
16B-1	CS, DT, SS	25,40	15,88	17,02	8,28	100,00	65,30	101,30	21,00	3,00/4,00	72,80
20B-1	CS, DT, SS	31,75	19,05	19,56	10,19	114,20	75,60	116,60	26,40	3,50/4,50	106,70
08A-1	CS, DT, SS	12,70	7,95	7,85	3,96	45,50	29,90	48,85	12,00	1,50	14,10
10A-1	CS, DT, SS	15,88	10,16	9,40	5,08	57,25	37,50	58,10	15,09	2,00	22,20
12A-1	CS, DT, SS	19,05	11,91	12,57	5,94	70,90	47,00	72,70	18,00	2,00/2,40	31,80
16A-1	CS, DT, SS	25,40	15,88	15,75	7,92	91,80	60,60	93,50	24,00	3,25	56,70

CS CARBON STEEL
DT DELTA-TONE
NP NICKELED PLATED
SS STAINLESS STEEL

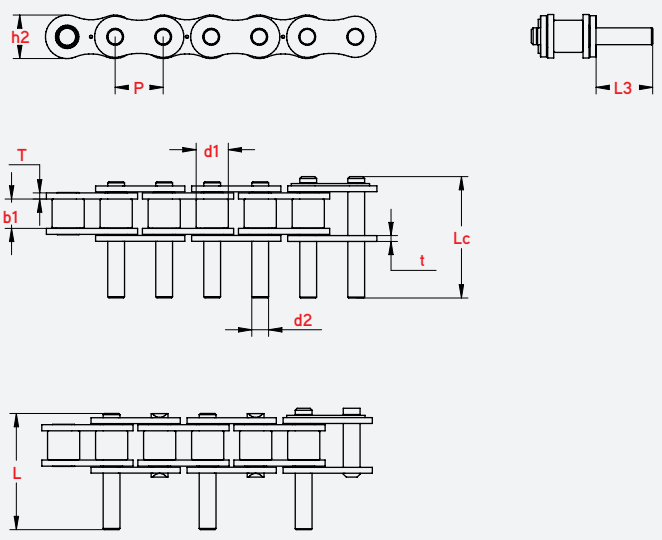

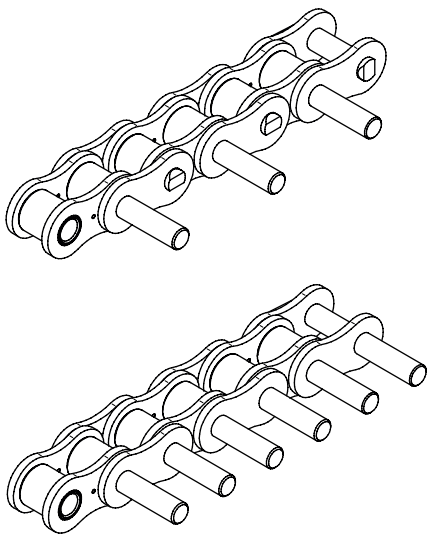

Roller chains with extended pins

Double extended pin - 2 sides

ISO/ASA SERIES

		Pitch	Roller diameter	width between plates	Pin diameter	Pin length			Inner Plate height	Plate thickness	Minimum Tensile strength
DIN/ISO No.	Material	P mm	d1 max mm	b1 min mm	d2 max mm	L max mm	L3 mm	Lc max mm	h2 mm	t/T max mm	Q min KN
08B-1	CS, DT, SS	12,70	8,51	7,75	4,45	30,70	8,00	31,10	11,50	1,50	19,40
10B-1	CS, DT, SS	15,88	10,16	9,65	5,08	35,70	9,60	37,35	14,70	1,60	27,50
12B-1	CS, DT, SS	19,05	12,07	11,68	5,72	42,00	11,20	43,15	16,00	1,80	32,20
16B-1	CS, DT, SS	25,40	15,88	17,02	8,28	67,40	17,80	69,40	21,00	3,00/4,00	72,80
20B-1	CS, DT, SS	31,75	19,05	19,56	10,19	77,80	20,40	80,20	26,40	3,50/4,50	106,70
08A-1	CS, DT, SS	12,70	7,95	7,85	3,96	31,30	7,40	32,70	12,00	1,50	14,10
10A-1	CS, DT, SS	15,88	10,16	9,40	5,08	39,80	9,70	41,55	15,09	2,00	22,20
12A-1	CS, DT, SS	19,05	11,91	12,57	5,94	49,20	12,10	50,95	18,00	2,00/2,40	31,80
16A-1	CS, DT, SS	25,40	15,88	15,75	7,92	61,90	15,65	64,70	24,00	3,25	56,70

Triple extended pin - 2 sides

ISO/ASA SERIES

		Pitch	Roller diameter	width between plates	Pin diameter	Pin length			Inner Plate height	Plate thickness	Minimum Tensile strength
DIN/ISO No.	Material	P mm	d1 max mm	b1 min mm	d2 max mm	L max mm	L3 mm	Lc max mm	h2 mm	t/T max mm	Q min KN
08B-1	CS, DT, SS	12,70	8,51	7,75	4,45	44,60	15,30	46,10	11,50	1,50	19,40
10B-1	CS, DT, SS	15,88	10,16	9,65	5,08	52,50	17,85	54,20	14,70	1,60	27,50
12B-1	CS, DT, SS	19,05	12,07	11,68	5,72	61,75	21,00	62,65	16,00	1,80	32,20
16B-1	CS, DT, SS	25,40	15,88	17,02	8,28	100,00	34,00	101,30	21,00	3,00/4,00	72,80
20B-1	CS, DT, SS	31,75	19,05	19,46	10,15	114,20	39,20	116,60	26,40	3,50/4,50	106,70
08A-1	CS, DT, SS	12,70	7,95	7,85	3,96	45,50	15,35	46,85	12,00	1,50	14,10
10A-1	CS, DT, SS	15,88	10,16	9,40	5,08	57,25	19,40	58,10	15,09	2,00	22,20
12A-1	CS, DT, SS	19,05	11,91	12,57	5,94	70,90	24,20	72,70	18,00	2,00/2,40	31,80
16A-1	CS, DT, SS	25,40	15,88	15,75	7,92	91,80	31,30	93,50	24,00	3,25	56,70

CS CARBON STEEL
DT DELTA-TONE
NP NICKELED PLATED
SS STAINLESS STEEL

